NOV./DEC., 1982
ISSN: 0164-4114

PROTECTIVE COVER

SECOND CLASS POSTAGE PAID
AT DES MOINES, IOWA

Woodsmith
1912 Grand Ave, Des Moines, IA 50309

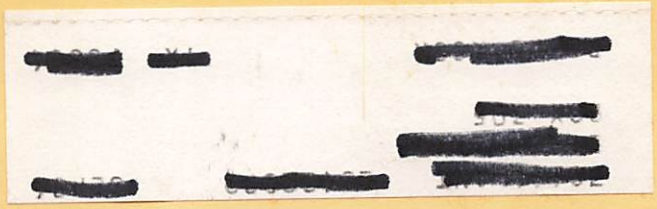

POSTMASTER:
ADDRESS CORRECTION REQUESTED

Woodsmith™
Woodsmith™
Woodsmith™
Woodsmith™
Woodsmith™

WOODSMITH

NO. 24 NOTES FROM THE SHOP $2.50

Woodsmith®

CLASSIC FURNITURE

MANTEL CLOCK • JEWELRY CASE
CHAIR-SIDE CABINET

JOINERY: HOW TO BUILD
FRAMES WITH A MOLDED EDGE

Woodsmith

Number 24 Nov./Dec., 1982

Editor
Donald B. Peschke

Design Director
Ted Kralicek

Art Director
Jon Snyder

Assistant Editor
Steve Krohmer

Graphic Designers
David Kreyling
Marcia Simmons

Subscription Manager
Sandy J. Baum

Subscription Assistants
Christel Miner
Vicky Robinson
Kim Melton
Jackie Stroud
Pam Dickey

Computer Operations
Ken Miner

Administrative Assistant
Cheryl Scott

ISSN: 0164-4114

WOODSMITH is published bimonthly (January, March, May, July, September, November) by Woodsmith Publishing Company, 1912 Grand Ave., Des Moines, Iowa 50309.
WOODSMITH is a registered trademark of the Woodsmith Publishing Company.
©**Copyright 1982** by Woodsmith Publishing Company. All Rights Reserved.
Subscriptions: One year (6 issues) $10, Two years (12 issues) $18. Single copy price, $2.50 (Canada and Foreign: add $2 per year.)
Change Of Address: Please be sure to include both your old and new address for change of address. Mail to: Woodsmith, 1912 Grand Ave., Des Moines, Iowa 50309.
Second class postage paid at Des Moines, Iowa.
Postmaster: Send change of address notice, Form 3579, to Woodsmith Publishing Co., 1912 Grand Ave., Des Moines, Iowa 50309.

BACK ISSUES

A list of the contents of all back issues appears on the wrapper of this issue. If the wrapper is missing, you can send for a booklet describing the contents and prices of all back issues.

SAMPLE COPIES

If you have a friend who would like to see a copy of **Woodsmith**, just send the name and address, and we'll send a sample (at no cost).

Sawdust

PERFECTION. I want to lead off this issue with a letter I received from one of our subscribers. He wrote:

"I subscribe to all the leading periodicals for woodworkers, which I read word for word, cover to cover to increase my knowledge of the craft. However, they all seem to be lacking in one respect . . . Doesn't *anyone* make mistakes!? I surely do. Despite meticulous care in measuring and laying out, a tool will slip or a router will burn. I conclude from my reading that this either doesn't happen to anyone else or they "junk" expensive wood and start over."

I wish I could say that every project shown in *Woodsmith* is perfect. But that's far from the truth. There are mistakes in every one. (Fortunately, they don't always show up in the photographs, so it looks like we're much better than we are.)

I don't mean to sound too philosophical, but mistakes are part of life. The goal is simply to keep them to a minimum. In order to achieve that goal, it helps to think things through — anticipate where a problem might occur, and make adjustments before you get to it.

Okay, that's a nice philosophy, but it doesn't really answer the question.

My personal approach to this nagging problem of mistakes is two-fold. The first and most important thing is "frame of mind." Woodworking is (and should be) fun. It should be a comfortable sequence of events carried out with patience and thoughtfulness.

How do you get in that state of mind? I pretend I'm one of those guys you see in *Fine Woodworking* magazine. Really. Even when I don't know what I'm doing, I simply pretend that I've done it a hundred times before. This helps build a little confidence so I can proceed without the extra weight of "fear of failure."

The second part of my approach involves the use of the most valuable "tool" in any shop — scrap wood. Before making any joint, I make a *trial* cut on a piece of scrap wood. I don't mean make a *practice* cut. "Practice" always seems to imply that it doesn't count. Instead, I make as many *trial* cuts as it takes until I've got one that's right on the money, and I feel good about it.

I guess what I'm getting at here is that trial cuts are essential for every project shown in this issue.

ABOUT THIS ISSUE. The molded mortise and tenon joint shown on page 12 takes a lot of patience — even if you're only cutting one of these joints. But in the case of the chair-side cabinet (page 14) the two door frames require a total of 20 of these joints.

The amount of care and patience needed to build these doors can lead to enormous frustration, or a well-deserved pat on the back. I think it's worth a shot.

The same thing is true of the Mantel Clock (page 8) and the Mirror (page 24). Both of these projects use the same molded mortise and tenon joint for frames. Both of them also require some molding cuts that must be aligned just right. Again, this is a matter of using scrap wood to make trial cuts to get the results you want.

STONES. The interview with Fred Damsen of Woodline (page 4) should clear up some of the mystery concerning Japanese water stones. Once again, the Japanese have given a lot of thought to the task at hand, and have come up with an excellent solution.

Although these stones do the job they're supposed to do (and do it extremely well), that's *not* why we like them. Our enthusiasm for water stones is due to one simple fact: They're a joy to work with.

You can feel them cut, but you can also "see" them cut. As soon as you push a chisel or plane iron across one of these stones, a visual image of sharpness is transmitted right up your arm. It's quite an experience.

PAPER. The paper used to print this issue of *Woodsmith* is different than before. For all past issues we used a paper stock from the Beckett Paper Co. (Beckett is a small, specialty paper mill that produces high-quality paper in relatively small quantities.)

With our increased circulation, we were pushing the capacities of Beckett to produce enough of the one particular stock we use. So we recently switched to Beckett's parent company Hammermill.

Hammermill agreed to produce an identical sheet, in large quantities. It looks and feels the same . . . only the name has been changed. The official name is *Woodsmith* Buff Opaque Offset Vellum. I hope my ego isn't showing, but I thought it was kind of nice that the name of the paper we use bears the name of *Woodsmith*.

NEW FACES. This column wouldn't be complete if I didn't mention that we've added a new face to the gang at *Woodsmith*. Pam Dickey has signed on to help with the mail-opening and entering subscriptions in our computer.

NEXT MAILING. The next issue of *Woodsmith* (Jan./Feb. 1983) will mark the beginning of our fifth year of publishing. *Woodsmith* No. 25 should be in the mail on February 1st.

Until then, Merry Christmas to all.

Tips & Techniques

A ROUTER TABLE FOR TIGHT SPACES

After I purchased your Bench Top Router Table plan booklet #12, I realized that my shop is really too small to have another work table sitting around. So I used some of the ideas in your plan and built a router table that fits into the wing of my table saw. The nice thing about this setup is that it doesn't take up any bench or floor space.

All I did was replace the table extension on the right side of my old 8″ Delta table saw with a plywood extension that sits between the two rip fence guide bars.

To make the new extension, I used ½″ birch plywood edged with 1¼″ x 1¼″ solid birch. First I cut the plywood so the final

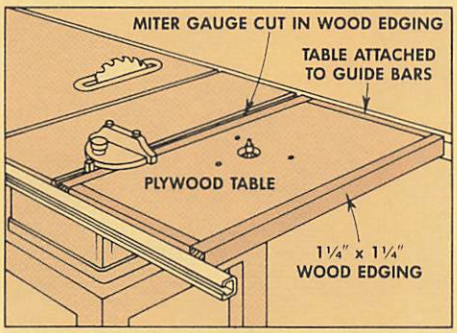

width of the extension (after adding the solid-wood edgings) was the same depth (front to back) as the saw table. Then I attached the birch edging to all four sides of the ½″ plywood.

After the birch edging was attached, I cut a groove in the edge nearest the saw table for the bar of the miter gauge.

To attach this extension, I drilled two ¼″ holes in both the front and back rip fence guide rails. Then I drilled corresponding holes in the birch edging of the extension, and installed ¼″ (inside diameter) threaded inserts.

To attach the plywood table to the rip fence guide bars, I used ¼″ x 1″ Rh machine screws threaded through the guide bars and into the threaded inserts in the birch edging. To keep the space between the extension and the rip fence guide rails the same distance as on the saw table (so the rip fence could still be used), I inserted a 3/16″ spacer on each screw between the extension and the guide rails.

The router is set into the table in the same manner as in your plan, with one exception. By using the ½″ thick birch plywood, the thickness of the top doesn't need to be reduced where the router is attached, as in your plan.

Ralph Kutchera
Wilsonville, Oregon

INSERTING INSERTS

In *Woodsmith* No. 22, you discussed installing rosan inserts into wood using a machine bolt. Your procedure works well for setting the rosan insert in place, but I had difficulty removing the bolt without removing the rosan insert too.

I use a slightly different method that seems to eliminate this problem. All I really do is thread a nut on the machine bolt before its threaded in the rosan insert. Then once the bolt is screwed in the insert, the nut is tightened against the insert using a wrench.

Using this method, the insert can be installed using a screw driver in the head of the bolt as in your article. But once the insert is in place, it's a simple matter to break the nut loose, and back-out the machine bolt.

Allen R. Martinson
Madison, Wisconsin

ANOTHER TOOL REST

I thought your readers might be interested in a variation of the grinder tool rest shown in *Woodsmith* No. 20. Rather than making a complete new support system for the tool rest, I just adapted the existing tool rest on my Sears grinder.

The new tool rest is just a piece of 4″ wide, 6″ long hardwood that's attached on top of the original tool rest. The new rest provides a much larger surface to steady a tool as it's being ground.

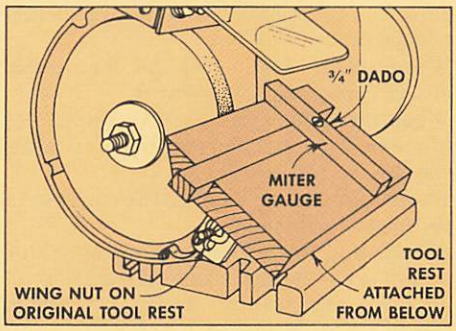

To help keep the tool at exactly 90° to the face of the wheel, I cut a ¾″ dado parallel with the 6″ edge of the rest. Then I made a miter gauge that fits the ¾″ dado to guide the tool across the width of the wheel.

The new rest is attached to the original from the bottom with two small screws. (On the Sears grinder, I had to drill two holes for the screws.) The new tool rest is adjusted by tilting the original tool rest.

W. A. Julien
South Chatham, Massachusetts

INSIDE OF AN ELIPSE

In *Woodsmith* No. 5, you stated that the inside edge of an eliptical frame isn't really a true elipse. The method you used to determine the inside line of the frame was to use a compass set at ¾″, running the pointed end around the outside line so that the pencil end scribes the inside line exactly parallel. But if the compass is twisted as it follows the elipse (which is almost impossible to prevent), the inside line won't be parallel with the elipse.

I think there may be a better way — using the "funny face" marking tool. This tool is simply a triangular piece of wood with two guide posts and a marking pin. To

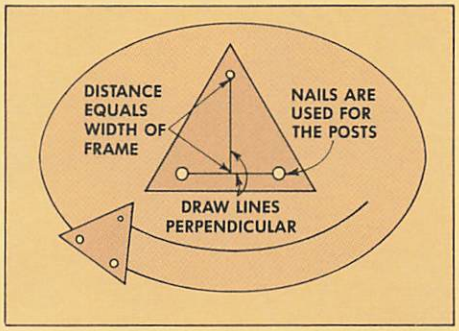

mark the location for the posts and the marking pin, draw a "T" on the face of the tool, see drawing. (Be sure the two lines of the "T" are perpendicular to each other.) Then drill small holes and insert two nails with their points cut off equidistant from the downstroke of the "T".

To position the marking pin, simply mark the final width of the frame on the down stroke of the "T" (measuring from the cross-bar line), and insert a small finish nail so that only the very point of the nail penetrates through the wood.

To use the tool, the two posts are pressed against the outside edge of the frame as the tool is guided around the elipse. Then the marking pin scribes a line equidistant from the elipse.

Edwin B. Tichenor
Pelahatchie, Mississippi

SEND IN YOUR IDEAS

If you'd like to share a woodworking tip with other readers of *Woodsmith*, send your idea to: *Woodsmith*, Tips & Techniques, 1912 Grand Ave., Des Moines, Iowa 50309.

We pay a minimum of $10 for tips, and $15 or more for special techniques (that are accepted for publication). Please give a complete explanation of your idea. If a sketch is needed, send it along; we'll draw a new one.

Japanese Water Stones

STONES THAT REDEFINE SHARPNESS

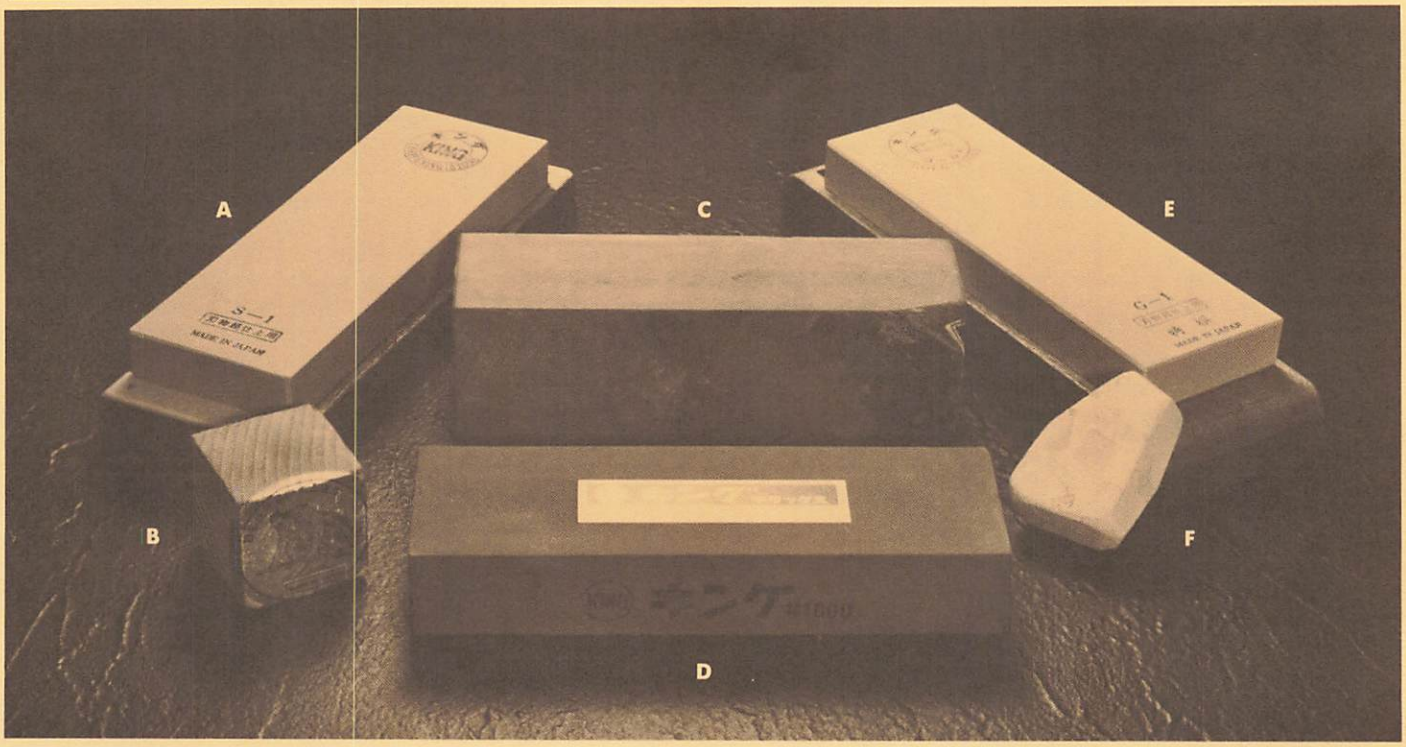

A) *6000-GRIT KING S-1 (SHIAGE TOISHI)*
B) *NAGURA (FOR S-1 AND BLUE STONE)*
C) *NATURAL BLUE STONE (AO TOISHI)*
D) *1000-GRIT KING COARSE STONE (TOISHI)*
E) *8000-GRIT GOLD STONE (SHIAGE TOISHI)*
F) *NAGURA (FOR GOLD STONE)*

Editor's Note: In the past year or so almost every woodworking catalog in the U.S. has started to carry Japanese tools — especially Japanese water stones. It's hard to recall such quick acceptance of any other "new" tool. But is all this excitement justified, or is it just another gimmick?

About six months ago we decided to get some Japanese water stones and try them out in the shop. To make a long story short, we like them — a lot. But we did encounter one problem. There's very little information about these stones.

That's when we contacted Fred Damsen of Woodline, The Japan Woodworker *to find out a little more about these stones and how to use them.*

Woodsmith: To start, I'd like to get some background information on Japanese water stones. Can you tell me a little about them?

Woodline: Well, first of all, there are two different types of water stones; naturally mined stones and man-made stones.

The natural stones have been mined in Japan for about 2000 years. But approximately 1200 years ago the best deposits were discovered in the Narutaki district (a mountainous area north of Kyoto). The natural stones were originally used to sharpen tools, knives, and that sort of thing. But the real development of the natural stones occurred as a result of the Japanese preoccupation with swords and armaments.

Woodsmith: When did the man-made stones come into the picture?

Woodline: I don't know an exact date, but it's been in the last 80 years or so . . . after the turn of the century.

Woodsmith: I didn't realize they are such a recent development?

Woodline: Yes. The man-made water stones came about because of a scarcity of good quality natural stones . . . which forced the price up.

Woodsmith: I've noticed in your catalog that natural stones (Awase Toishi) are priced in the range of $25 to $400, so let's get back to the man-made stones which are more in the price range of typical western oil stones. Your catalog lists two basic types: the coarse stones (Toishi) and the finish stones (Shiage Toishi). What's the difference between these two types? What are they made of?

Woodline: Well, there's a variety of material used to make the man-made stones. The coarse stones, we believe, are made of aluminum oxide which is fired in an oven to form a brick. In fact, that's just what they amount to . . . a brick made of very fine material.

As for the man-made finish stones, there are a lot of different ones made, and it's difficult to determine what material is used. We do know of one stone that's made of cerium oxide — that's a rare polishing compound, the stuff that's used to grind mirrors to make telescopes.

It's difficult to say what all the stones are made of because the stone people, the manufacturers, won't tell us what materials they use.

Woodsmith: How would you compare Japanese water stones to western oil stones . . . to the Arkansas stones for instance?

Woodline: Arkansas stones will give you a really fine finish, but they won't polish the edge as finely as the water stones.

Personally, I think there are two problems with Arkansas stones. First, they're never flat. Even after they're flattened, it doesn't take much sharpening before they become dished out. And second, the Arkansas stones are so hard you can't feel the tool on the stone.

The water stones are softer. Part of it is just individual feel, but if you have a softer

stone that's cutting a little faster, you can feel the tool on the stone and it helps you find the bevel.

What happens with the Arkansas stone is that the material on the surface becomes rounded, which reduces the cutting action. Until you wear that surface away, you're not exposing any new abrasive.

The water stones on the other hand, are softer material. You're constantly wearing away the top abrasive particles and exposing the fresh, sharp abrasive underneath. The end result is that water stones will cut much faster than oil stones.

Woodsmith: When we decided to get some water stones, the first problem we had was trying to decide which stones to purchase for a coordinated sharpening system. What stones would you recommend to achieve a very fine edge on western tools?

Woodline: There are a couple of ways to go about it. For the coarse stone, I'd recommend either the 1000-grit King stone, or if you have a tool that's in relatively good shape without any nicks, you can use a 1200-grit King stone.

Then there are two choices for finish stone (Shiage Toishi), which is determined pretty much on your budget. The 6000-grit King S-1, or if you want an even finer finished edge, the 8000-grit Gold stone.

Woodsmith: Can you go straight from either the 1200, or the coarser 1000 King brand, directly to the finish stones?

Woodline: Yes you can, but I personally think using the 1000-grit stone will leave the edge a little on the rough side. You'd be better off to go with the 1200-grit King stone, which produces smaller scratches on the bevel, and then go to the finish stones, either the S-1 or the Gold stone.

Now if you want the keenest, finest edge that you can get, I'd use the coarser 1000-grit coarse stone for a faster sharpening, to remove nicks, and follow it with what we call the blue stone (Ao Tosihi, a natural stone), and then the finish stone. The blue stone takes out the scratches of the coarser 1000-grit stone fairly rapidly, and will allow you to get a better finish and a longer lasting edge with the finish stones. But a lot of western tools are simply not worth the effort because one swipe, and the edge is gone anyway.

Woodsmith: We've been using the King brand 6000-grit S-1 as our finishing stone. We've considered purchasing the 8000-grit Gold stone, and were wondering how much it would really improve the edge over the S-1?

Woodline: Well there is a difference. They're different materials for one thing, although the manufacturers won't tell us what the material difference actually is. The Gold stone is a harder stone and it gives a faster polish than the S-1. But I don't care for the Gold stone quite as much as I do for the S-1, even though I think the Gold stone gives a little better edge. I still prefer the S-1 because personally, I like a little softer stone.

Woodsmith: After the stones are in hand, what steps have to be taken before they're ready to be used?

Woodline: The very first thing is that the stones have to be wet . . . they have to be well saturated. I keep my stones in a bucket with a tight-fitting lid so they stay damp. Then when I'm ready to use them, I fill the bucket with water and by the time I'm ready to go, the stones are saturated.

Woodsmith: Can the man-made stones be left in water indefinitely?

Woodline: All of the King brand (man-made) stones that we carry in our catalog can be left in water. Here in the shop we have stones that have been in water constantly for six years, and there's no ill effect. There are other brands of man-made stones that cannot be left in water because part of the compound in the stone will be leeched out, and then they won't sharpen properly.

One other thing. We used to have a problem with scum if the stones are left in water all the time. But a couple of drops of Clorox took care of that. And I mean just a couple drops and no more, or it stinks up the water.

Woodsmith: You said the King man-made stones can be left in water. How about the natural stones?

Woodline: No! It should be made clear that the natural stones will come apart if they're left in water. I don't think the natural blue stone will, but all of the other natural finish stones will.

I'd suggest your readers check with whomever they bought the stones from to find out if it's safe to leave them in water.

Woodsmith: Once the stones are saturated, what's the next step?

Woodline: The next step is to be sure that the stones are flat. For the coarse stones, the easiest way to flatten them is to rub them on a piece of 220-grit *Wet-or-Dry* sandpaper that's on a flat surface.

Woodsmith: Using water as a lubricant?

Woodline: Yes, put the sandpaper in some water to get it wet or just throw a little water on it before starting to lap the stone. The ideal way to lap it is to hold the stone in the center, and push it away from you applying pressure only as you move forward, and let up as you move back.

You don't want to move the stone back and forth with pressure both ways because that tends to round over the ends. Then turn the stone end for end, and take a few more strokes. It depends, it may only need a couple of strokes.

Then the next step is to make sure that the edges, which may be sharp at this point, are sanded at a 45° angle. It only takes two or three passes on each edge. The reason for beveling the edges is to keep them from chipping off under the pressure of the tool as it reaches the edge of the stone.

Woodsmith: Do you use the sandpaper method to flatten both the blue stone and the finish stone?

Woodline: No, never. Both the blue stone and the finish stone are flattened with a coarse stone that's already flat. The finish stones are soft enough that if you get carried away rubbing them on the sandpaper, you'll wear away a year's worth of abrasive.

Woodsmith: Once the stones are flat, what are the steps involved in sharpening a plane iron or chisel, for example?

Woodline: Actually, the first step should be to square up the edge of the plane iron. On western planes irons, if they're really bad, you might want to go to a grinder to square up the edge. But with a Japanese tool, you simply cannot put it on a grinder because even very low heat will draw the temper. Once you've got the edge square, the next step is to flatten the back on a coarse water stone.

Woodsmith: I've noticed when honing on the coarse stone, a kind of slurry builds up. Are the water stones supposed to create a slurry on the surface?

Woodline: Yes, the coarse stone creates its own slurry as the tool is being honed. As the slurry builds up on the surface, leave it on the stone. What happens here is that the particles get finer as the honing progresses. As those particles break down, they begin to refine the edge.

Woodsmith: So it begins to refine the edge even before switching to the finish stones?

Woodline: Yes, because you've got a finer material in suspension. If you have a lot of heavy removal to do, you may want to clean off some of the slurry on the coarse stone to get back to the coarser grit. But when you're finishing up on the coarse stone, you definitely want the slurry left on the stone to refine the edge and get it ready for the next finer grit stone.

Woodsmith: So once the back is flattened on the coarse stone, do you move on to one of the finish stones?

Woodline: Yes, after the back of the iron is flattened, it's polished on the finish stone. But before the finish stone can be used, it's best to bring up a slurry or mud using a Nagura stone. Move the Nagura in a circular motion over the stone to bring up some of the abrasive compound and put it in suspension on the surface of the stone.

The honing process would eventually accomplish the same result as the Nagura, but using the Nagura stone just speeds up the process. This slurry is what actually does the polishing. So you never want to remove the slurry — even if it starts to turn dark from the metal of the plane iron. If it starts to dry out, just add a couple of drops of water.

Woodsmith: One question we had after experimenting with the water stones is how much water should be used?

Woodline: You only need to use enough water to keep the surface lubricated so that you'll have a smooth feel with the tool on the stone. When it starts to dry out, I usually dip my fingers in the water and shake a couple of drops on the stone.

Woodsmith: So you're not trying to water down the creamy paste that accumulates on the surface of the stone.

Woodline: No. The idea is that you don't want to keep flooding the surface, but to use just enough water to keep it well lubricated. And that will also vary from tool to tool, depending on the hardness of the steel and the width of the bevel, etc.

Woodsmith: Once the back of the iron is polished on the finish stone, what are the steps in honing the bevel?

Woodline: The first step is to hone the bevel on the coarse stone until you've turned a wire edge. Once the wire edge is turned on the coarse stone, you alternate honing the bevel, and then the back on the finish stone. I usually take about 5 or 6 strokes on the bevel for each stroke on the back.

Woodsmith: You only use the finish stone to remove the burr?

Woodline: Yes, once you've turned a wire edge, you don't wipe the wire edge off on the coarse stone, it's only taken off on the finish stone.

Woodsmith: If you're using the blue stone, do you use it after the coarse stone to hone the bevel, before going to either the S-1 or the Gold stone?

Woodline: Right. Then you alternately hone the bevel and the back until the wire edge is removed.

Woodsmith: After the wire edge is removed on the blue stone, then you go straight to the King S-1 stone to polish the beveled edge?

Woodline: Yes.

Woodsmith: How can you tell whether or not you're improving the edge on the finish stones if you've already removed the wire edge on the blue stone?

Woodline: As you hone the tool on the S-1 or the Gold stone, you inspect the bevel. And you can tell because it becomes polished.

Woodsmith: So you use the level of polish to determine the sharpness of the tool?

Woodline: Yes, the level of polish tells you where it's at. Another thing you'll find when sharpening Japanese tools is that the wire edge comes off faster than on western tools.

Woodsmith: Is that because the western steel is softer?

Woodline: Exactly. We've tested some Japanese plane irons that are 65 or a little higher on the Rockwell scale versus English tools we've tested that are 54 to about a high of 61. And that (the Rockwell scale) is not a linear scale; it's a logarithmic scale, so there's quite a bit of difference in hardness of the steel between Japanese and English tools.

Woodsmith: Let's say I had a lot of money to spend, would you suggest getting some of the natural stones?

Woodline: I don't think the natural stones are worth the price . . . for Western tools. Except for the blue stone (Ao Toishi), which is a natural stone. It definitely gives a better finish and a longer lasting edge because it removes the scratches left by the King brand coarse stones.

Woodsmith: With all of the advantages of water stones, what would you consider to be their drawbacks?

Woodline: The only drawback would be in using water. I sharpen on the floor, so it's not much of a problem. But if you were working on a bench, and you get water on the wooden bench, it would have to be considered a drawback.

Woodsmith: How about in terms of actually using water stones to sharpen? Are there any disadvantages in comparison to western oil stones.

Woodline: As for my personal feelings, there are no disadvantages in comparison to western oil stones. And I feel that the water stones make a better sharpener out of you. They cut faster, they're easier to use, and a person usually has better success in using them because you can feel the cutting action.

OUR OPINIONS

After talking with Fred Damsen about "coarse" water stones, I think some clarification of this terminology is needed. The 1000-grit King stone (which Fred calls the "coarse" stone) is actually equivalent to a soft Arkansas stone. In effect, Japanese water stones begin where the western oil stones leave off.

As for the Japanese finish stones, the "grit" of these stones is so fine, there's nothing else to compare them to.

OPINIONS. We've been using Japanese water stones in our shop for about six months now, and everybody here is quite impressed to say the least. Even the least expensive combination of coarse and finish stones (1000-grit coarse and the S-1 finish stone, about $12 each) can produce an edge that puts a razor blade to shame. And they do it with amazing speed.

Without overstating the case for these stones, I think they're well worth having in the shop. The only probem is deciding which stone (or which combination of stones) to buy.

We've tried several combinations, and to be honest, we've had a lot of difficulty (and several heated debates) trying to determine the "best" combination.

The question finally got down to: How sharp is sharp enough? This may sound strange, but until we tried the water stones, we never thought we could "oversharpen" our tools.

The edge produced by these stones (especially the finish stones) may actually be sharper than western tool steel can "hold". On most of our western tools, this ultra-edge may be gone in the first pass over the wood.

With that in mind, using a combination of the 1000-grit coarse stone and the S-1 finish stone would be an excellent starting point . . . and maybe all that's needed to sharpen western tools.

However, if you're sharpening Japanese chisels or plane irons (which have much harder steel), using the natural blue stone (Ao Toishi) as an intermediate step, and finishing with the 8000-grit Gold stone may make enough difference to warrant the extra expense.

All of this gets down to a matter of personal preference. If this sounds like I'm dodging the issue, to some extent I am. In all honesty, the results of our shop tests are really more proof of our limitations in determining degrees of sharpness, than it is a criticism of the water stones.

The bottom line is this: All the excitement about Japanese water stones is more than justified. Get one and try it out. Your plane iron will love you for it.

TIPS. As we were testing the water stones, a couple of things proved useful to make the whole process run smoother. First, we used a common drywall mud bucket to soak the stones. (This is just a plastic trough, available at any lumber yard). It's just the right size for all the stones mentioned in the interview.

Another thing that seemed to make a difference was using the Nagura stone to bring up a slurry on the S-1 stone. The Nagura only costs $4.95, and improves the finish the S-1 put on our chisels.

And a final note of caution: Don't leave these stones in an unheated shop. If the temperature dips below 32°, the water in them will freeze, and crack the stone.

SOURCES. All of the Japanese water stones mentioned in the interview can be ordered from the Woodline The Japan Woodworker (Catalog: $1.50), 1731 Clement Ave., Alameda, CA 94501. The stones mentioned are:

Coarse (Toishi) water stones:
- King brand 1000-grit $10.95
- King brand 1200-grit $10.95

Natural blue stone:
- Ao Toishi $14.50

Finish (Shiage Toishi) (man-made) stones:
- King 6000-grit S-1 ..... $11.95
- King 8000-grit Gold $38.95

The Nagura stone for the S-1 finish stone is Stock #15.573.96 — $4.95

The Nagura for the Blue stone and the Gold stone is: Stock #15.576.47 — $3.50.

Diamond Stones

"A GIRL'S BEST FRIEND" FOR THE SHOP

Diamond stones are one of the newest developments in the field of sharpening. Although diamonds have been used for years in industrial applications, it's only been in the past few years that "a girl's best friend" has become a practical answer to sharpening tools in a home shop.

We've been using diamond stones (made by Diamond Machining Technology) for about a year now. During that time we've discovered they perform beautifully in some respects, and rather poorly in others.

Diamond stones cut extremely fast, faster than any other stone we've used (including Japanese water stones). And if you really need to hog off some metal, (without the problems associated with a grinding wheel) diamond stones are the fastest method we've found.

However, on the other side of the coin, I've been rather disappointed that even the "fine" stone doesn't produce a very fine cut. In fact, it's coarser than "coarse" oil stones, and I don't even consider using diamond stones when it comes time to hone a finished edge.

So what good are they? Diamond stones are ideal for the initial (coarse) honing needed to flatten the backs of chisels and plane irons. In *Woodsmith* No. 20 and 23 we talked about the process we use to sharpen these tools. In both cases the face (flat) side must be honed to remove grinding marks (left by the manufacturing process) and to take out any warp across the width of the chisel or plane iron.

This is a tedious job that often requires removing quite a bit of steel. Diamond stones excel at this kind of honing because they cut very quickly (which is very helpful when you're trying to correct a badly warped plane iron).

But what makes a diamond stone cut any better than a coarse *India* (aluminum oxide) or *Crytolon* (silicon carbide) stone?

Two things. First, diamonds are the hardest natural material known to man. And second, diamonds are crystaline (which produces sharp corners).

This doesn't sound like a big deal, but there's a definite advantage to using an abrasive that's both extremely hard and very sharp. The extreme hardness allows diamonds to retain their sharp cutting edges, rather than rounding over or breaking off as they're used.

And since diamonds remain sharp, they maintain a favorable rake angle. That is, since the sharp cutting points on diamonds don't round-over, they continue to *cut* the metal, rather than "plow through" or "mushroom in" as other abrasives do as they get worn.

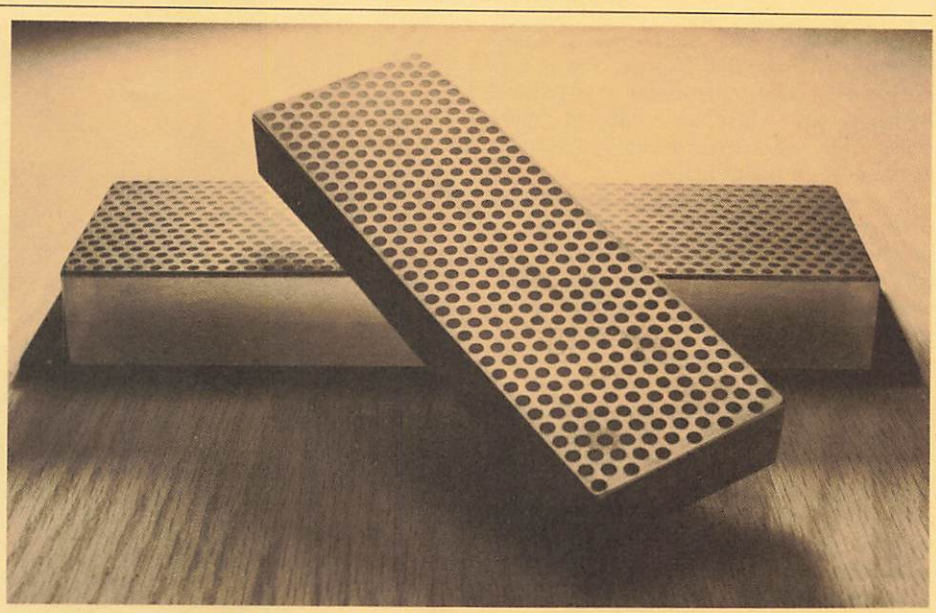

In fact, you can actually feel this cutting action as you use them. Without much pressure at all, you can feel the "drag" as the diamonds cut through the steel. (Water is used as a lubricant on these stones to carry away the shavings.)

This kind of rapid cutting action provides one of the best ways we know to flatten chisels and plane irons. And if you don't have a grinder (or don't want to risk a "burned" edge), diamond stones are very helpful for "cutting" the initial bevel along the cutting edge.

Although both of these uses are only the initial steps in sharpening (honing and polishing on "normal" oil or Japanese water stones comes next), it's a step that's critical if you want a straight, sharp edge.

However, the key in this whole thing is using a stone that's flat and that stays flat. This raises some questions about the way diamond "stones" are manufactured. So we decided to go straight to the source: David Powell, President of Diamond Machining Technology (DMT) for some answers.

During our conversation, he confirmed our suspicions that diamond stones are a "high tech" product developed from the ground up, or in this case, the base up.

DMT uses fiber reinforced poly-carbonate to form the base. By adding fibers to the poly-carbonate, the tensile strength is increased to the range of mild steels, making it almost impossible to break the base.

After the base is formed, it's molded to a perforated steel plate. This plate is then ground perfectly flat to provide a true surface for applying the diamonds. (The polka-dotted appearance on the surface of the stones is created by the poly-carboante base showing through the perforated steel plate.)

Next, the diamonds are applied to the steel plate in a two-step process. (Both steps are actually carried out simultaneously). First, the diamonds are salted over the plate (with a coverage of about 80,000 diamonds per square inch.) As the diamonds are applied, a thin layer of nickel is electroplated to the surface of the plate to hold the diamonds in place.

This process continues until two-thirds of the height of the diamonds is submerged in the nickel. The result is that only the very tip of each diamond sticks above the surface of a very flat plate.

And since diamonds are very hard and durable, they will actually fall out before the surface becomes dished. Luckily, the wear rate for diamonds is so slow that the stones will last (and stay flat) for an incredibly long time.

Okay, diamond stones sound great, but they also sound expensive.

Granted, these stones aren't cheap. DMT offers five sizes (from 3″ to 12″ long), in both fine and coarse grits. The price ranges from $14 to $95. (The stone we use the most is the "fine" grit 2″ x 6″, $36.)

For more information on DMT's line of diamond stones, contact: Parkers, P.O. Box 241, Wellesley Hills, MA 02181. They will send a price list and mail-order form.

Mantel Clock

A NICE WAY TO FRAME A DAY

After building the Schoolhouse Clock shown in *Woodsmith* No. 21, I was consumed with an uncontrollable urge to build another one — a classic case of "clock fever." The only cure, I decided, was to try my hand at a mantel clock.

The woodworking part of this project involves a number of custom moldings, all of which can be made with ordinary router bits on a router table. As for the design, the basic dimensions are determined to a great extent by the "moving moon" dial. (It moves to show the phases of the moon during the month.)

No matter what dial (or works) you choose (see Sources at the end of this article), it's best to have them in hand before the woodworking begins. This is particularly important for the door, because it must be designed to fit around the dial. And the rest of the case must be built to accommodate the clock works.

THE ARCHED DOOR FRAME

Once you have the dial, the door is built to size so the inside of the frame overlaps the dial by ¼". This would be relatively easy if it weren't for the arch (at the top of the door frame) that has to fit around the "moving moon." Since this arched piece presents the biggest problem, I started with it.

The best way to cut the arch is with a router and trammel attachment — because a router produces a true, clean edge that needs very little sanding. (I used a Sears router and multi-purpose router guide No. 9 GT 25179, see *Woodsmith* No. 21.)

This approach works just fine . . . until the router makes its final pass, and the inside and outside sections of the arch are separated. Trying to control the router and both pieces as they break free is more than I really wanted to handle.

Instead, I used the following procedure to keep everything connected while the routing was done. First, I cut the top rail (C) to final length (allowing for the tenons that will be cut later).

However, the initial width of this rail should be about ⅝" wider than needed, see Fig. 2. This extra width allows you to position the cut for the arch so you don't have to rout all the way to the bottom edge. Then after the arch is cut, the inside waste can be removed by simply trimming off the bottom edge.

ROUTING THE ARCH. The first step in doing all of this is to determine the location of the pivot point for the trammel attachment. First, mark a parallel baseline 3⅞" from the top edge of the door rail (C). (This measurement is the final width of this rail.) Then mark the pivot point at the center of this line, see Fig. 2.

PILOT HOLE. To rout this arch, I wanted to use a ¼" straight bit, making a series of passes, and lowering the bit about ¼" with each pass. But in order to lower the bit, I had to drill a ¼" pilot hole. This hole is positioned so its outside edge is exactly on the inside edge of the arch. Since the radius of the arch is 2⅞", I centered this ¼" pilot hole 2¾" from the pivot point, see Fig. 2.

To cut the arch, I simply inserted the trammel attachment in the pivot hole, lowered the straight bit about ¼" into the pilot hole, and locked the trammel arm in place. Then as the arch is routed, the bit should cut at least as far as the base line, but not all the way to the bottom edge, see Fig. 3.

After the arch is routed to full depth, trim the bottom edge off of the rail so the final width is 3⅞", see Fig. 4. This trim cut will also remove the waste piece inside the arch.

MOLDING AND RABBET

That takes care of the worst part of the door frame. Next, the two door stiles (A) and the bottom rail (B) are cut to size, see Fig. 1. Then the inside edges of all four pieces for the door are routed to form a shouldered quarter-round molded edge.

This molding cut is made (on the router table) with a ¼" rounding-over bit, and

positioned to leave a 3/32"-deep shoulder along the face side of all four pieces, see Detail A in Fig. 1.

RABBET. Then, a rabbet is cut on the back edge of each piece for the glass. Although the width of this rabbet is shown as 1/4", the actual width must be exactly the same as (in line with) the shoulder of the quarter-round molding.

After setting the fence on the router table to the correct width, I set the depth of cut to leave a 1/16" flat area on the outside edge of the quarter round. (This is so the quarter round doesn't end quite so abruptly.)

MORTISE AND TENON

Now the four pieces for the door frame can be joined with mortise and tenon joints. (See page 12 for the details on this joint.) Before the mortises can be cut, some of the quarter-round molding has to be trimmed off the ends of the stiles (A). I used the shoulder of the molding cut on the two rails to determine the amount to be removed.

Then I cut the 1/4"-wide, 3/4"-deep mortises at the top and bottom of both stiles, see Fig. 1. And finally, the tenons are cut in the top (C) and bottom rails (B) to fit the mortises. Note: a fence on the miter gauge is needed to span the arch of the top piece (C) when the tenons are cut.

Before the door is assembled, I mitered the quarter-round moulding at all four corners, see Fig. 6. Then the door frame can be glued up.

CHAMFER. Although it's not necessary, I also routed a double-stopped chamfer on the outside corner of both stiles, see Fig. 1.

THE GLASS

All that's left is to cut the glass to fit the rabbet on the back side of the door. Normally, cutting glass for a door isn't a big deal. But the glass for this door is a real pain.

The problem, of course, is cutting an arch in the glass to match the rabbet on the back of the arched frame. I used a circle-cutting glass cutter to scribe the shape of the arch. This isn't too difficult. But as I broke off the waste, I discovered the real problem: cleaning out the corners at the ends of the arch. I got lucky and finally cut a good piece before I ran out of glass.

But there is an easier way — let someone else do it. Check in the Yellow Pages for a local glass company, especially one that specializes in stained glass. They usually have the equipment to make this type of cut, and will be glad to do it (for a small fee).

MOUNTING THE GLASS. To mount the glass in the door frame, I used a 1/4" rubber "keeper" strip, see Fig. 7. This strip can be tacked in place and is flexible enough to follow the contour of the arch. (See Sources at the end of this article.)

FIGURE 1

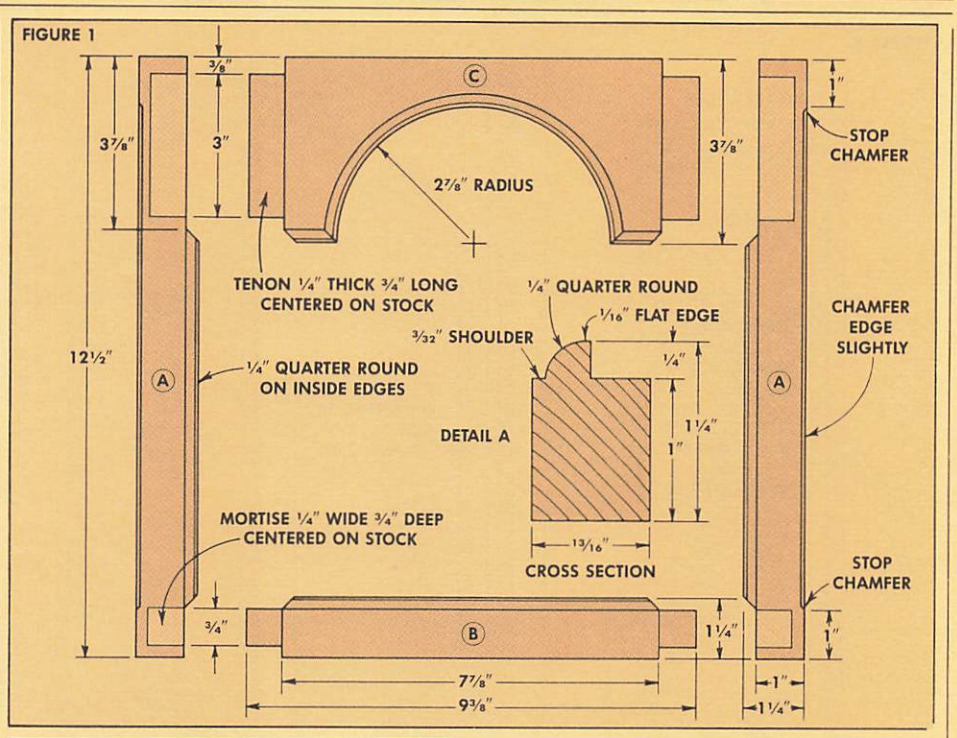

FIGURE 2

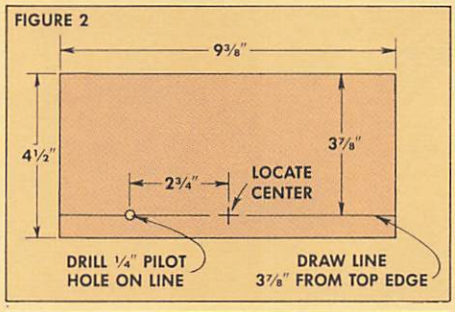

FIGURE 3

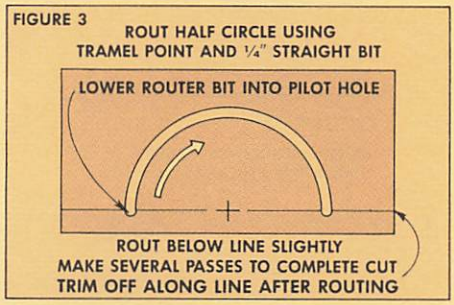

FIGURE 4

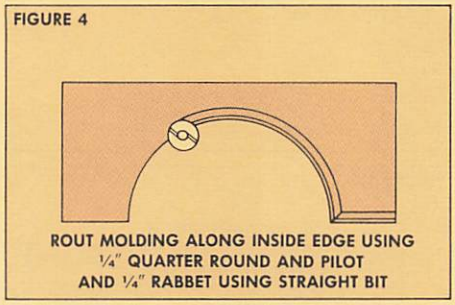

FIGURE 5

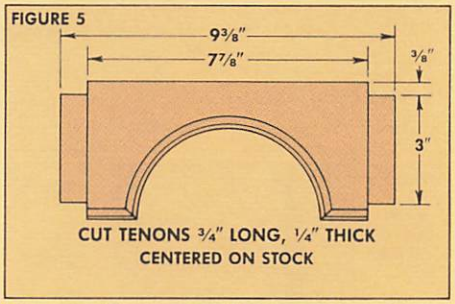

FIGURE 6

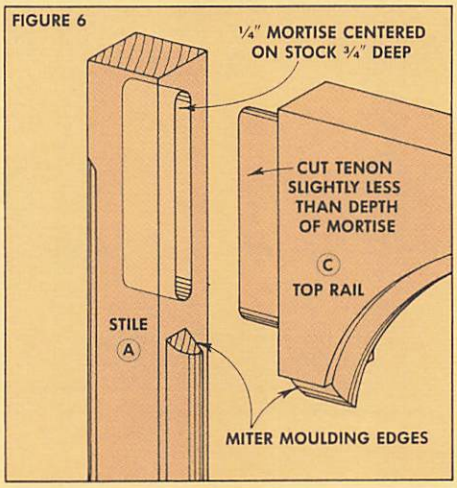

FIGURE 7

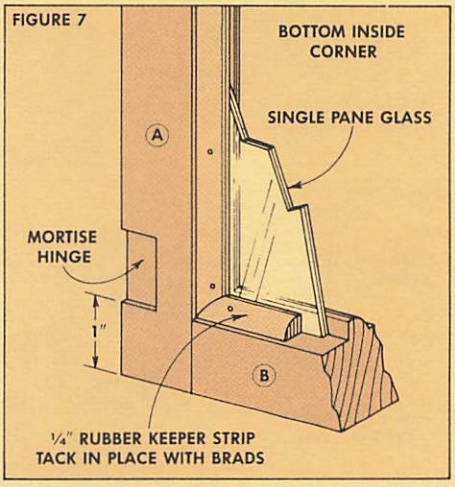

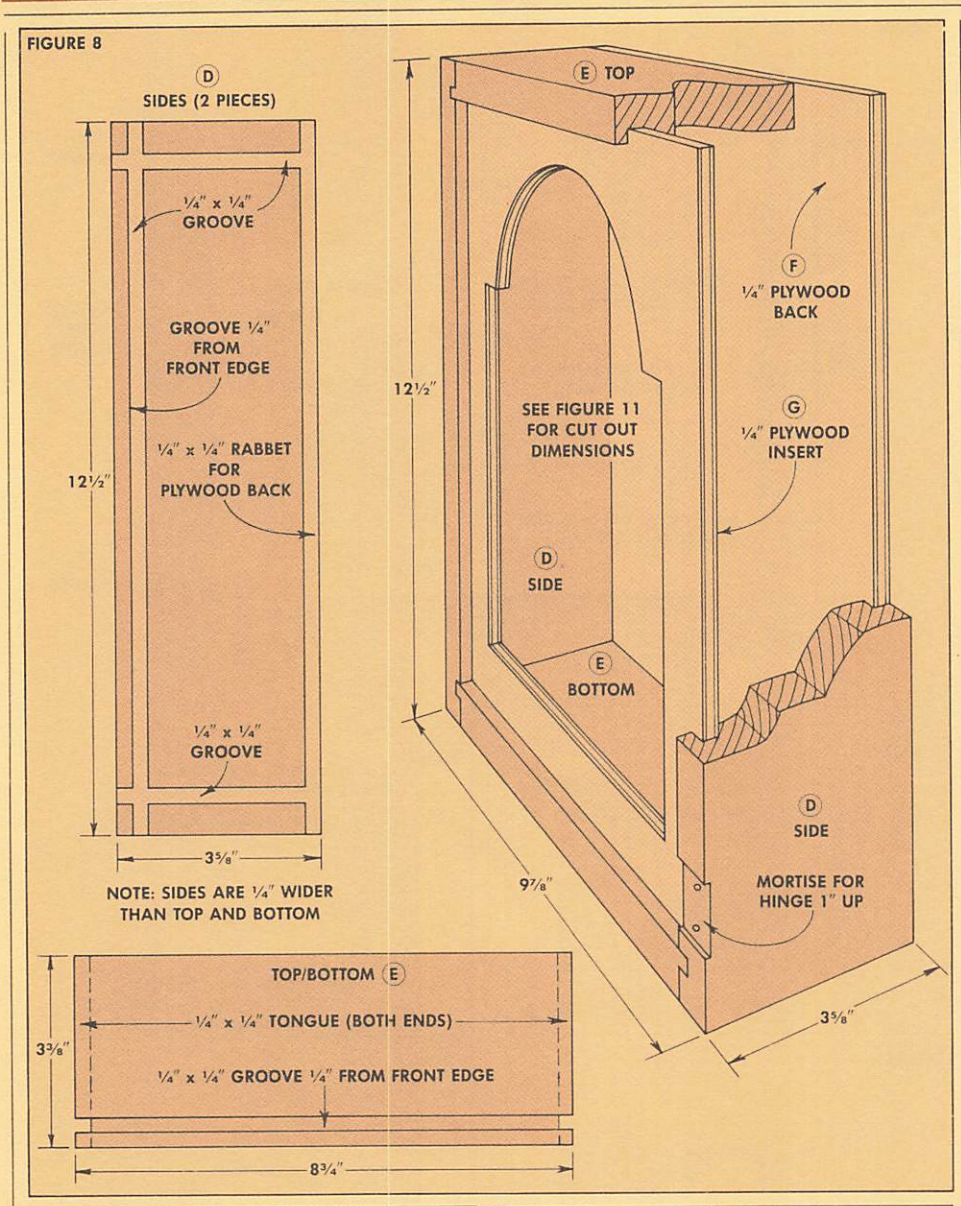

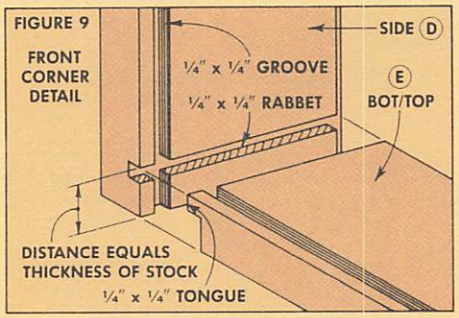

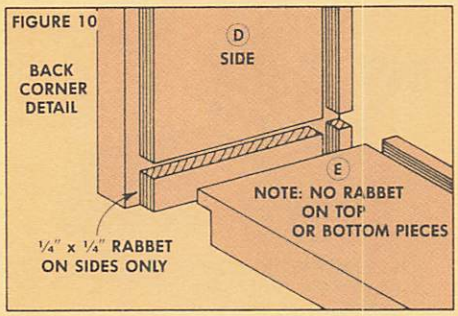

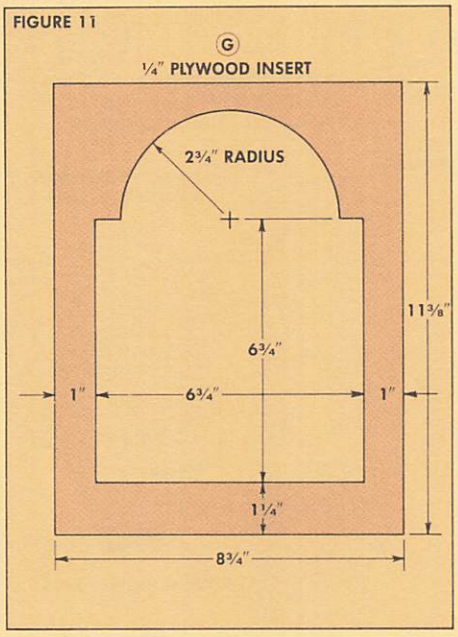

THE CASE

The case for this clock is just a box that's sized to fit the door frame and is deep enough for the clock works.

The first step in building the case is to cut the two sides (D), the top (E) and the bottom (E) to final width (3⅝"). The sides (D) can be cut to final length (to match the height of the door frame). However, the final length of the top and bottom pieces is determined by the tongue and groove joint used to join the case.

To cut this joint, I started by cutting a ¼" x ¼" groove in the side pieces (D), see Fig. 8. Then rabbets are cut on the ends of the top and bottom pieces, leaving tongues that fit these grooves, see Fig. 9. Note: the distance between the shoulder of these rabbets determines the final width of the case, which must equal the width of the door frame.

GROOVES FOR FRONT. In order to mount the moving moon dial, a plywood front piece (G) must be mounted to the case. I cut ¼"-deep grooves for this plywood piece. These grooves are positioned ¼" from the front edge of each piece to allow clearance for the clock hands between the dial and the glass door, see Fig. 8.

RABBET FOR BACK. Finally, ¼"-deep rabbets are cut on the back edge of the sides for the plywood back (F).

PLYWOOD FRONT. After the four basic pieces for the case are completed, they're dry-assembled to get measurements for the plywood front (G). The center of this plywood panel is cut out to fit around the clock works. I cut this hole to allow a ½" overlap for attaching the dial, see Fig. 11.

ASSEMBLY. Finally, I glued up the clock case using the plywood front to hold the case square as it's clamped together. After the case was assembled, I cut the ¼" plywood back (F) to fit the rabbet in the back of the case.

THE MOLDINGS

What turns this basic box into a mantel clock are the six molded pieces used for the crown and base. Although each profile uses different setups, I followed the same general rules for routing all the pieces.

1) Because of the small size of the pieces being molded, using a router table (see *Woodsmith* No. 20) is the only way to safely cut the different profiles.

2) Some woods have a nasty habit of chipping out as they're routed. To help prevent the worst of this, start every pass on the end grain of the piece. Then the following pass on the long grain usually removes the damage.

3) Although some of these cuts are made with bits that have a pilot, I also used the router table's fence (positioned flush with the pilot) to stabilize the smaller pieces at the beginning and end of each cut.

All of these molding cuts are made using six bits; ½" cove, 5/32" roman ogee, ½" core box, a rabbet bit (any size), and both a ¼" and ½" quarter round.

THE CROWN. The crown consists of three pieces, all with different molded edges, see Fig. 12. The first piece (H) is cut to size and routed with a roman ogee bit. After this piece is routed, there should be a ⅛" lip hanging over all four edges of the top of the case, see Fig. 14.

Note: This piece is the same size as the base (K), so I cut them at the same time.

The next piece (I) is cut 1" smaller (in both dimensions) and routed in two passes with two different bits: a ½" cove bit and then a straight bit.

The third piece for the crown (J), is cut to size 1½" smaller than the second piece (I), and routed with two bits: a ½" quarter-round bit and a ½" core box bit.

THE BASE. The base piece (K) is identical to the bottom crown piece (H). The feet are cut to size from ½"-thick stock (see Fig. 13), and routed with a ½" quarter-round bit on the three outside edge and a ½" cove bit on the inside edge, see Detail A, Fig. 13.

ASSEMBLY. When gluing these pieces together to form the crown and the base, they have a tendency to slip around before the glue sets. To prevent this, I clamped them together and drilled holes for alignment dowels to hold the pieces steady as they're glued together.

THE HANDLE. Before mounting the crown to the case, drill ¼" holes through all three pieces of the crown, counterboring the bottom piece, see Fig. 14. Also counterbore the top (E) of the case so the screws (and handle) can be removed when the finish is applied. Finally, both the crown and the base can be attached to the case using #8 x 1¼" woodscrews.

FINAL ASSEMBLY. Now the door can be mounted by cutting mortises for the door hinges. Then I installed the plywood back with turn buttons mounted on the back edge of the case sides. And finally, I mounted the clock works, following the instructions that come with them.

FINISHING. To finish the clock case, I applied four coats of Tung Oil high-luster finish. (Available from Garrett Wade, 161 Ave. of the Americas, NY, NY 10013).

SOURCES FOR CLOCK PARTS

Several different movements can be used on this clock (including battery-powered movements). The movement we chose is from Mason & Sullivan Co., 586 Higgins Crowell Road, West Yarmouth, Cape Cod, MA 02673.

We ordered the Westminster Chime (No. 3600X, $96) that drives a moving moon dial (No. 7370A, $49.50). We also ordered the hardware package (H6690X, $8.10) which includes the hinges, handle, knob, and the rubber keeper stop.

FIGURE 12

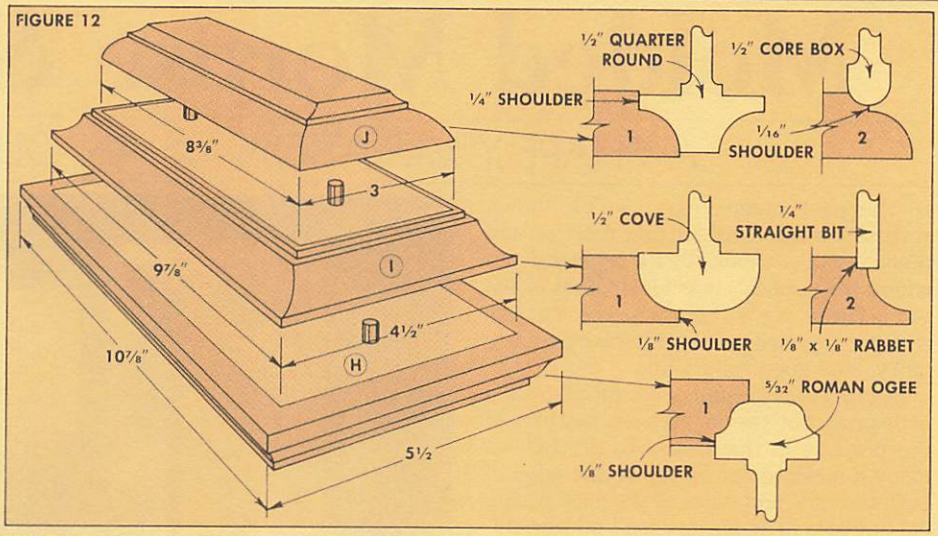

FIGURE 13

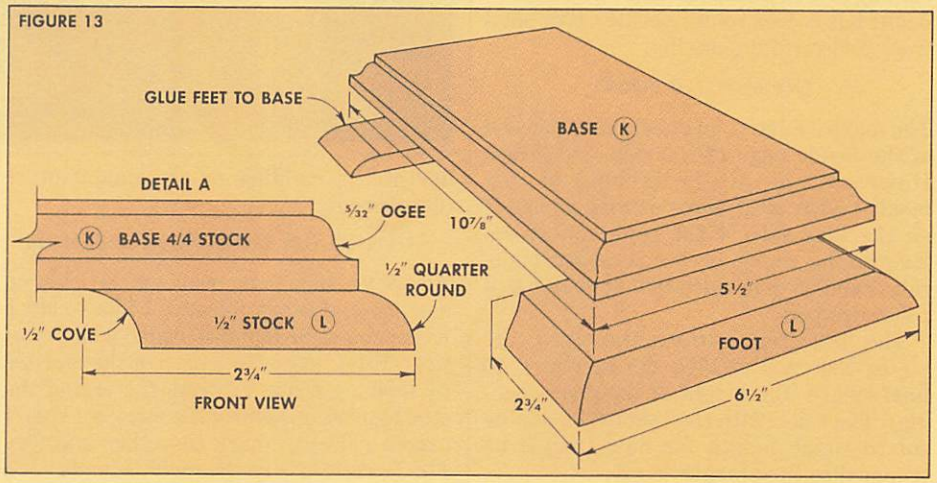

FIGURE 14

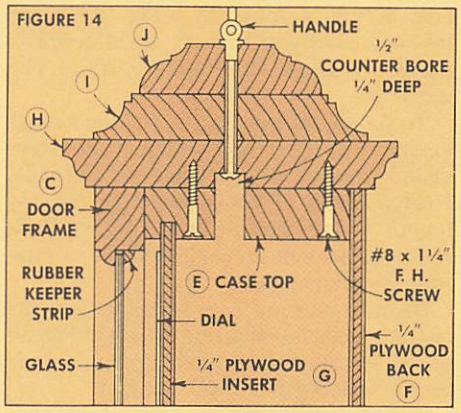

FIGURE 15

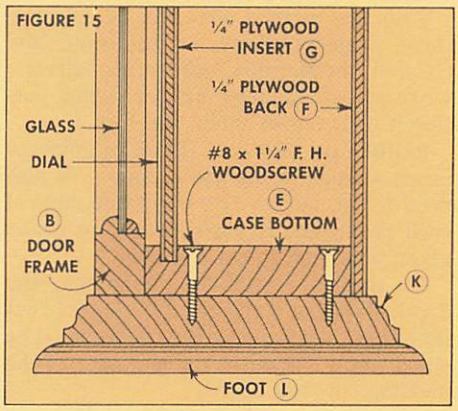

MATERIALS LIST

A	Door Stiles (2)	13/16 x 1¼ - 12½
B	Bottom Door Rail (1)	13/16 x 1¼ - 9⅜
C	Top Door Rail (1)	13/16 x 3⅞ - 9⅜
D	Case Sides (2)	13/16 x 3⅝ - 12½
E	Case Top/Bottom (2)	13/16 x 3⅝ - 8¾
F	Plywood Back (1)	¼" Plywood
G	Plywood Front (1)	¼" Plywood
H	Crown Molding (1)	13/16 x 5½ - 10⅞
I	Crown Molding (1)	13/16 x 4½ - 9⅞
J	Crown Molding (1)	13/16 x 3 - 8⅜
K	Base Molding (1)	13/16 x 5½ - 10⅞
L	Feet (2)	½ x 2¾ - 6½

CUTTING DIAGRAM

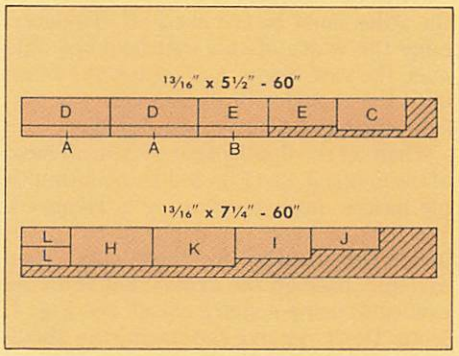

Molded Mortise & Tenon

A SHAPELY VARIATION OF AN OLD FAVORITE

In the past three years, we've shown several variations of cutting mortise and tenon joints — especially for cabinet doors where the application is ideal. Most of the variations we've shown are rather straight-forward . . . nothing particularly fancy, just good solid joints.

But this time around, we wanted to put a little pizzazz on the door frames for three of the projects in this issue. To do that we made a molding cut on the inside edge of both the rails and stiles of the door frame. Adding this little feature isn't all that difficult, but it does require some extra hand work and careful planning.

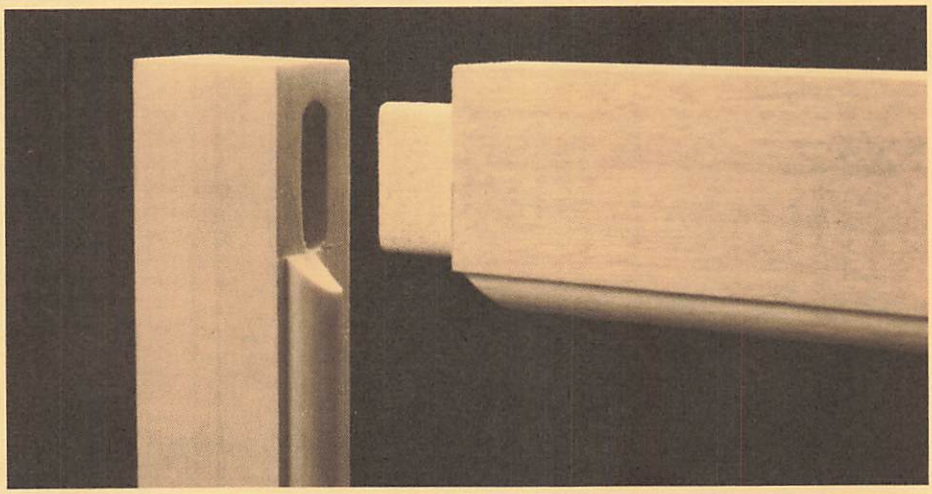

THE MOLDED EDGE

The molded edge is, in effect, an extension of the inside edge of the rails and stiles. However, the profile (shape) of this molded edge must leave a small shoulder on the face side of the rails and stiles. Everything you do (as far as measuring is concerned) is done with that shoulder as a reference point.

The first step is to cut the stiles (the pieces that will receive the mortises) to final length (the height of the door opening). The rails (with the tenons) should be cut to rough length for now (they'll be trimmed to final length later).

Then the molded edge can be cut. For three projects shown in this issue (the Cabinet, the Mantle Clock and the Mirror), we used a shouldered quarter round, cutting it on a router table, see Fig. 1.

RABBET OR GROOVE. If you're going to insert a panel in the door frame, you also need to cut a groove on the inside edge of each piece. Or, if you're going to insert glass, you need to cut a rabbet.

No matter which cut you make, the depth of the cut is critical. The depth of cut for either the groove or the rabbet must be equal to (in line with) the shoulder of the molding cut, see Fig. 1.

CLEAN OFF MOLDED EDGE. Before the mortise can be cut, part of the molding on the stiles must be trimmed off. To determine the width of this cut, hold the stile over the saw blade, and adjust the fence until the shoulder is aligned with the outside edge of the blade, see Fig. 2.

Then set the depth of cut to trim off most of the molding, see Fig. 3. Just make multiple passes until the molding is removed. It's best to keep the depth of cut a tad under the shoulder for these cuts. Then carefully pare off the excess (left from the saw cuts) using a sharp chisel, see Fig. 4. Note: Don't remove too much, the shoulder of the molding must remain intact (untouched).

CUTTING THE MORTISE AND TENON

As we've shown in previous articles on mortise and tenon joinery, I like to cut a European-style mortise (called a slot mortise). First mark the length of the mortise by scribing a line ¼" from the end of the stile to mark one end of the mortise. Then I used a chisel to mark the other end (see Fig. 5) right where the molding ends. (It's best to use a chisel to make this mark because later you'll need a good accurate mark to align the miter cut on the molding.)

To rough-out the mortise, clamp a fence on the drill press and adjust it so you're drilling exactly on the center of the stile. Drill a series of holes to rough out the length of the mortise, see Fig. 6. Then clean up the sides (cheeks) of the mortise with a sharp chisel.

Shop Note: I prefer brad-point spur bits or the special mortise bits shown in Figure 6. (These special bits are available from Sears, Catalog No. 9 GT 24215.)

THE TENON. There are several methods for cutting the tenons on the rails, but the one I like the best is shown in Figure 8. First, cut the rails to final length, allowing for the distance between the stiles and the length of the two tenons.

To cut the tenons, set the depth of cut of the saw blade by using the mortise as a guide, see Fig. 7. Next, adjust the fence so the distance between it and the *outside* of the saw blade is equal to the length of the tenon.

Now make the shoulder cut for the tenon by guiding the rail through the saw blade with the miter gauge, see Fig. 8. Then continue to make multiple cuts out to the end of the tenon to finish it.

Now you can flip the rail over and cut the other face of the tenon. However, it's always best to check this cut by making a trial cut out at the end of the tenon and then testing the fit in the mortise.

TRIM TO SIZE. After the tenon has been cut to the proper thickness, it must be trimmed to width. This is done with the fence in the same position, and the height of the saw blade adjusted to make the cuts as shown in Fig. 9. Finally, round over the corners of the tenon (with a file) so it fits the rounded corners of the mortise.

MITERED CORNERS

Now comes the fun part. The corners of the molding must be mitered so the joint fits together. Although this can be done on a table saw, I prefer to do it with a sharp chisel so I can slowly sneak up on the cut.

To guide the chisel, I made a simple jig (shown in Fig. 10). This is just a thick piece of scrap with a groove cut in it to accept the rails and stiles. Then one end of the jig is mitered at 45°.

To miter the molding on the stiles, slip the stile in the jig and align the chisel mark (made in Fig. 5) with the mitered edge of the jig, see Fig. 11. First, chip off the corner of the molding. Then very carefully pare the molding down to the mitered surface of the jig.

The same thing is done with the rail. Slide it into the jig so the shoulder of the tenon is aligned with the mitered face of the jig. Then pare off the molding.

The finished joint should fit together with the two mitered moldings mating perfectly. This takes a little work (and patience), but the results are impressive.

Step By Step

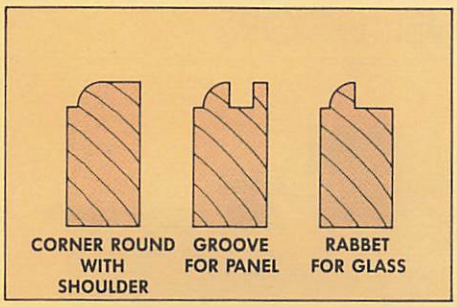

1 *The molding cut should leave a shoulder along the edge of each piece. Then the depth of the rabbet or groove must be equal to the depth of that shoulder.*

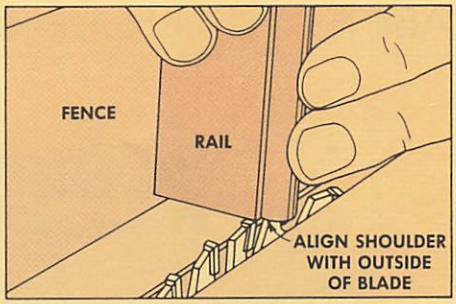

2 *Part of the molded edge must be removed from the stile. To set the length of this cut, use the shoulder of the rail as a guide to adjust the position of the fence.*

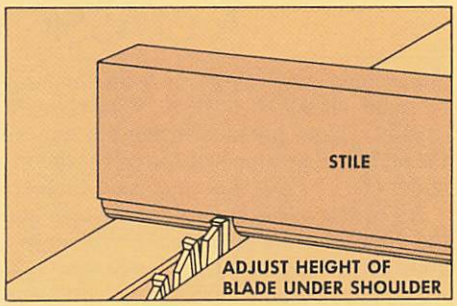

3 *Next, set the depth of cut to just skim under the shoulder of the molding. Guide the stile through the blade with the miter gauge, making multiple passes.*

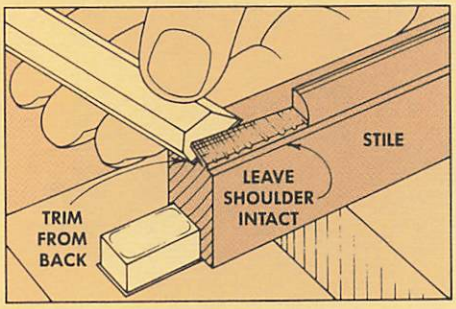

4 *Pare off the excess left by the saw cuts with a sharp chisel, working from the "back" of the stile. Don't pare off any of the shoulder — leave it intact.*

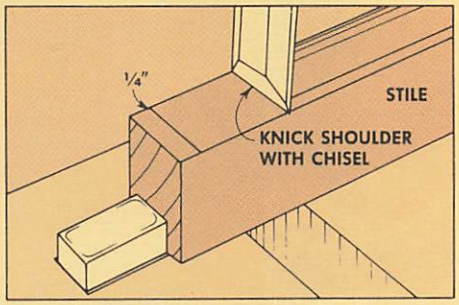

5 *Mark the length of the mortise by drawing a line ¼" from the end of the stile. Then use a chisel to "knick" the shoulder right where the molding ends.*

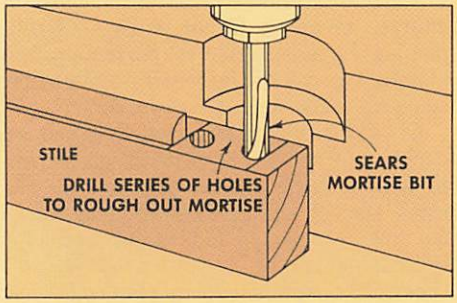

6 *Clamp a fence to the drill press and adjust it so the drill bit is exactly centered on the stile. Then drill a series of holes to rough out the mortise.*

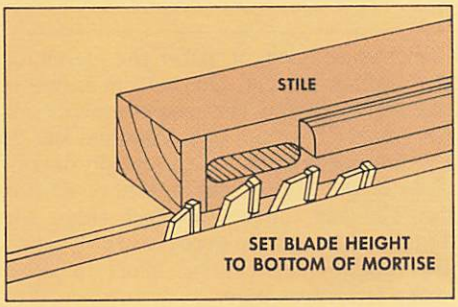

7 *To cut the tenon, set the depth of cut using the mortise as a guide. If the mortise is exactly centered, this setting will work for both faces of the tenon.*

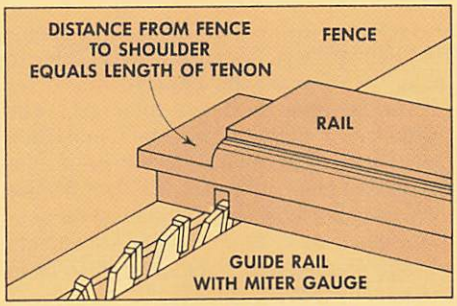

8 *Next, set the distance between the fence and the outside of the saw blade equal to the length of the tenon. Then make a shoulder cut and continue out to the end.*

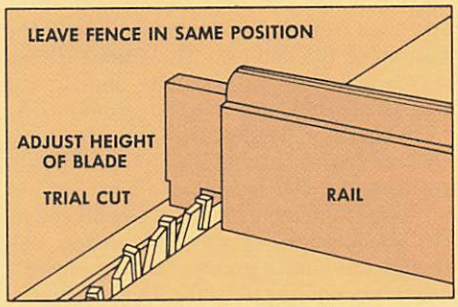

9 *Finally, with the fence in the same position, set the depth of cut to trim the tenon to width. Then round-over the corners with a file to fit the mortise.*

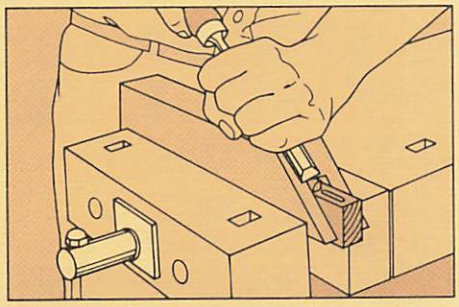

10 *To miter the corners of the molding, make a simple jig out of a thick piece of scrap. Cut a groove to hold the rails and stiles, and miter the end at 45°.*

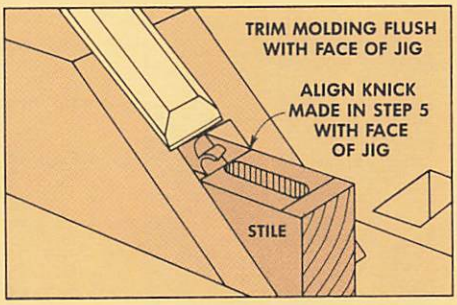

11 *Place the stile in the jig, lining up the chisel cut (made in Step 5) with the mitered face of the jig. Then pare off the corner of the molding with a chisel.*

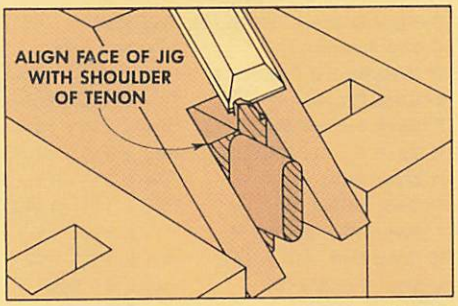

12 *For the rail, line up the shoulder of the tenon with the mitered face of the jig. Then carefully pare down the molding until the corner is also cut at 45°.*

Chair-Side Cabinet

A CLASSIC CABINET WITH FOUR-PANEL DOORS

Sometimes I wish there were an easy way to build classic furniture. This thought usually crosses my mind when I'm right in the middle of a project that involves dozens of details . . . like this chair-side cabinet.

All of the molding cuts on the top, and the details on the doors make this project quite a challenge. But if it were easier, it wouldn't have such impressive results, and it certainly wouldn't be half as much fun to build.

CHOICE OF WOOD. When we set out to build this cabinet, we decided to use walnut, solid walnut everywhere. This, of course, meant a lot of work -- hand-planing the sides and top to perfection, and making sure all of the joinery allowed for seasonal expansion of the wood.

All of this work may be worth it, but we decided to show a somewhat easier approach — using walnut plywood for the sides, the top and the bottom. This works out well because the four major pieces for this cabinet can be cut from a half (4′ x 4′) sheet of ¾″ walnut-veneer plywood.

THE WEB FRAMES

After digging deep in my pocket for the walnut needed for this project, I started cutting it up. The first step was to make two web frames for the false top and the bottom of the cabinet. The frames themselves are identical, but the one for the bottom also has a plywood panel set into it.

To build the frames, the four side pieces (A) and four front and back pieces (B) are cut to width and length, see Fig. 2. Then ¼″ wide, ⅜″ deep grooves are centered on the inside edges of all eight pieces. (Although full-length grooves are not entirely necessary on the pieces for the top frame, I cut them anyway because it was easier to make both frames the same.)

STUB TENONS. Next, the sides (A) of the frame are joined to the front and back pieces with stub tenons. This type of joinery makes the construction of the frames very easy because there's no need for separate mortises. The stub tenons need only be long enough and thick enough to fit in the panel grooves, see Fig. 3.

PLYWOOD BOTTOM. After the pieces for the frames are cut, the bottom frame is dry-assembled to get measurements for the plywood bottom (N). The final size of the bottom is equal to the inside dimensions of the frame, plus a total of ⅝″ (for two 5/16″-long tongues on each side), see Fig. 3. Although the grooves are ⅜″ deep, the tongues are cut 1/16″ short to allow space for excess glue.

MATERIALS LIST

Overall Dimensions: 22″H x 27¾″W-27¾″D	
A Web Frame Sides (4)	13/16 x 2⅜ - 21½
B Web Frames Frt/Bk (4)	13/16 x 2⅜ - 24¾
C Top Frame (4)	1 1/16 x 3 - 26¾
D Kick Board Frame (4)	13/16 x 2½ - 27¾
E Base Frame (4)	13/16 x 2½ - 26¾
F Back Frame Stiles (3)	13/16 x 1½ - 14½
G Back Frame Rails (2)	13/16 x 1½ - 24
H Door Rails (4)	13/16 x 1½ - 11
I Door Stiles (4)	13/16 x 1½ - 16¾
J Door Mid. Rails (2)	13/16 x 1¾ - 11
K Door Mid. Stiles (4)	13/16 x 1¾ - 7¾
L Door Panels (8)	13/16 x 4 - 6⅜
M Top Panel (plywood)	¾ x 21⅜ - 21⅜
N Bottom Panel	¾ x 21⅜ - 20⅝
O Cabinet Sides	¾ x 18 - 25¼
P Back Panels	¼ x 10½ - 14½

CUTTING DIAGRAM

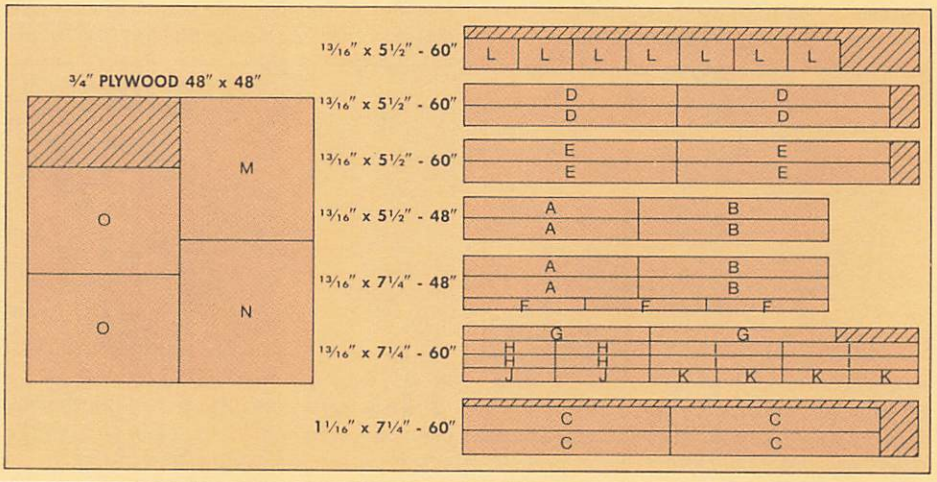

THE TONGUES. Next, tongues are cut to fit the grooves in the frame. These tongues are kind of a problem because they must be cut off-center. Since the wood for the frames is 13/16" thick and the plywood panel is only 3/4" thick, I had to adjust the position of the tongues to compensate for this 1/16" difference, see Details in Fig. 2.

To cut the tongues, I cut rabbets on both sides of the plywood, using a straight bit on the router table. It's best to test this cut on a scrap piece, slowly sneaking up on the depth of cut for each rabbet.

RELIEF SHOULDER. Getting the face sides of the plywood and the frame perfectly flush is not easy (and usually more than I can manage). If the cuts for the top rabbet are off just a little, the plywood panel will be either too high or too low. Trying to sand the frame and the panel flush at this point is a problem because the face veneer of the plywood is so thin.

One trick to get around this problem is to rout a very small (1/16" x 1/16") shoulder along the top edges of the plywood, see Details in Fig. 2. This small shoulder allows just enough relief so minor variations between the face of the plywood and the face of the frame are not noticeable.

RABBETS. The last step before assembly is to cut a shallow rabbet on the four front and back pieces (B), see Detail in Fig. 2. This rabbet is used on the front of the case as a stop for the doors. And on the back of the case, it serves as a mounting joint for the frame and panel back.

ASSEMBLY. Now, both web frames can be glued and clamped together. Since the panel in the bottom frame is plywood, the tongues can (and should) be glued into the grooves.

CABINET SIDES

The two sides (O) of this cabinet are also cut from the walnut-veneer plywood. As shown in Fig. 1, I cut them 18" long (high). As for the width, I trimmed them a total of 1/4" less than the front-to-back measurement of the web frames.

This width measurement allows for the 1/8"-thick edging strips of solid walnut on the front and back edges of the sides. (The top and bottom edges don't need edging strips because they'll be covered with the top and base.)

CUT DADO. The sides are joined to the web frames with a tongue and dado joint. First, I cut a dado at the top and bottom edges of both side pieces, see Fig. 4. Once again, I used the router table.

TONGUE ON WEB FRAMES. After the dadoes were cut, I cut two rabbets on the sides of the web frames, leaving a tongue to mate with the dado, see Fig. 4. (This can also be done on the router table — the same way as on the bottom panel.)

ASSEMBLY. Finally, the sides can be glued and clamped to the two web frames.

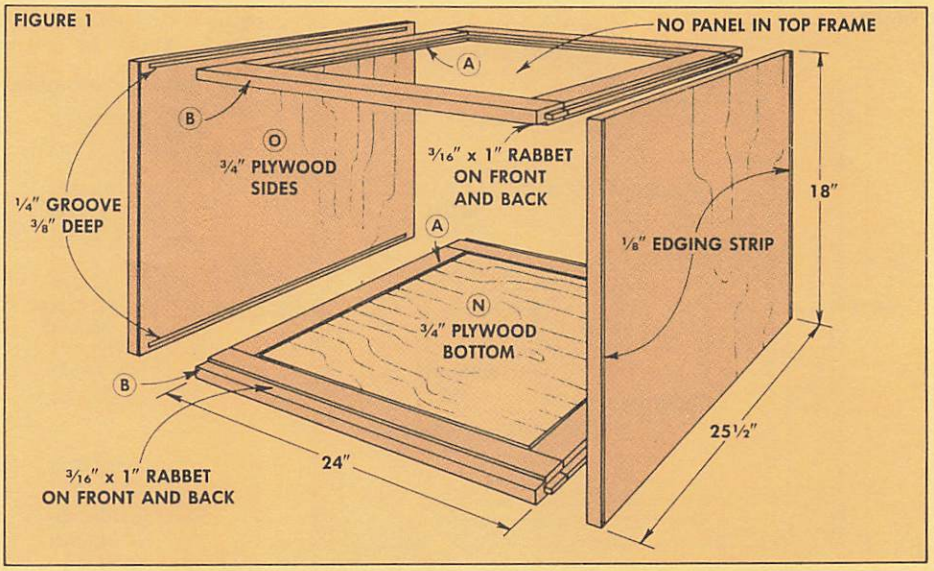

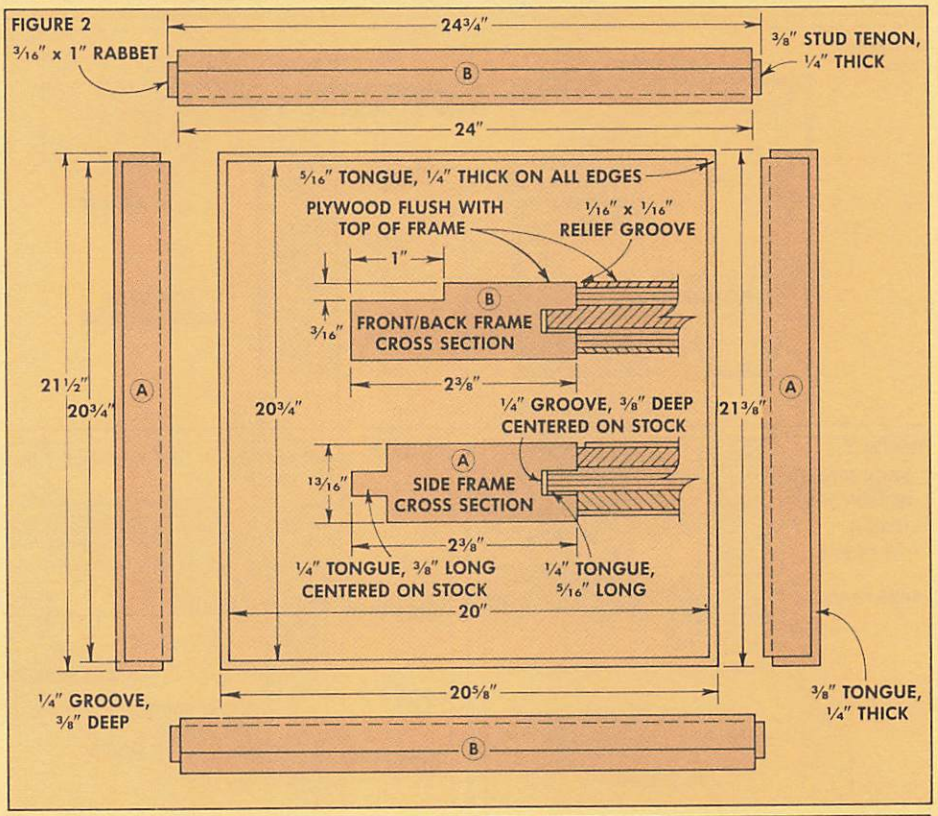

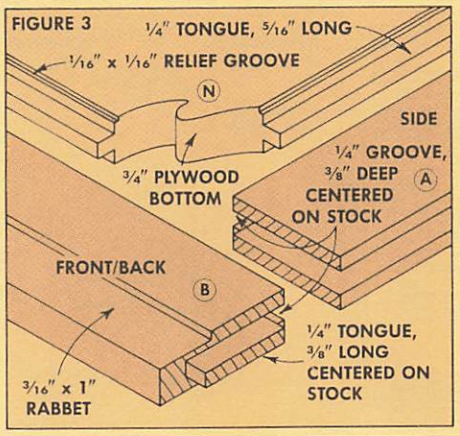

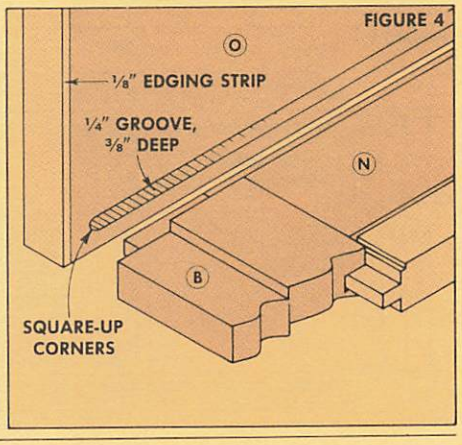

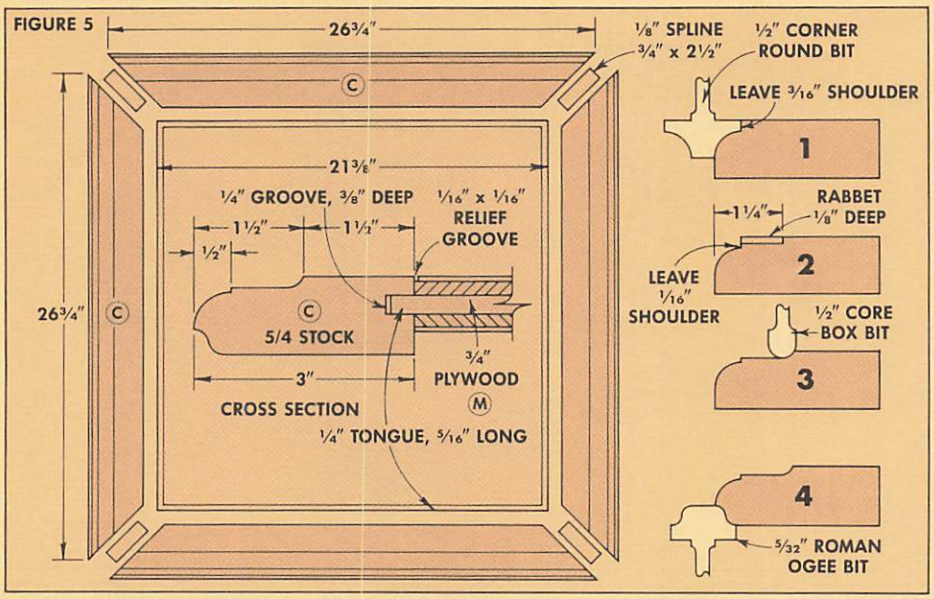

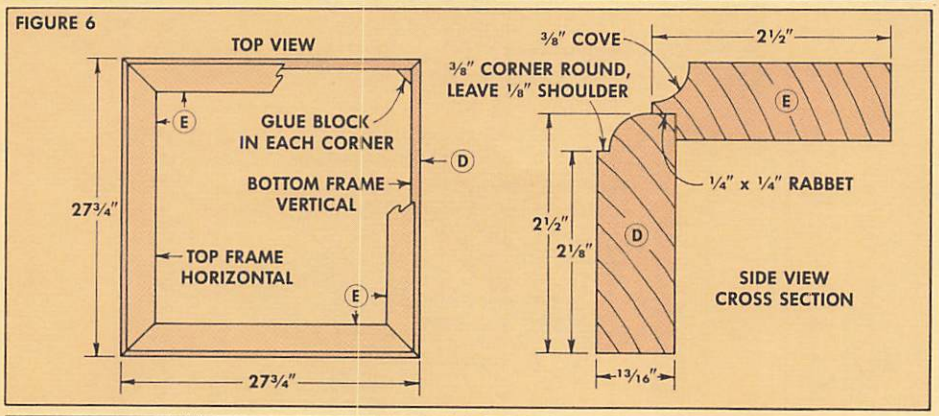

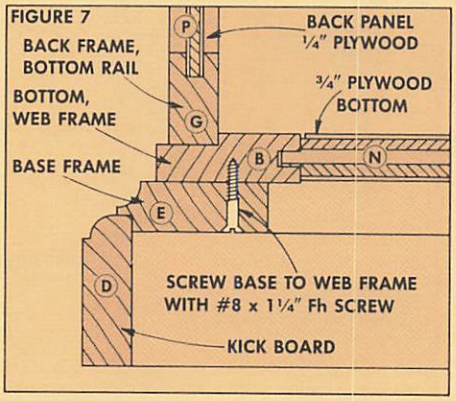

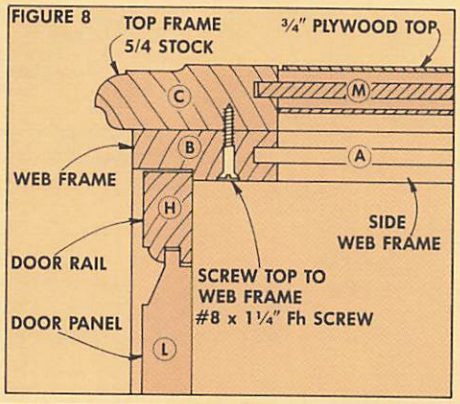

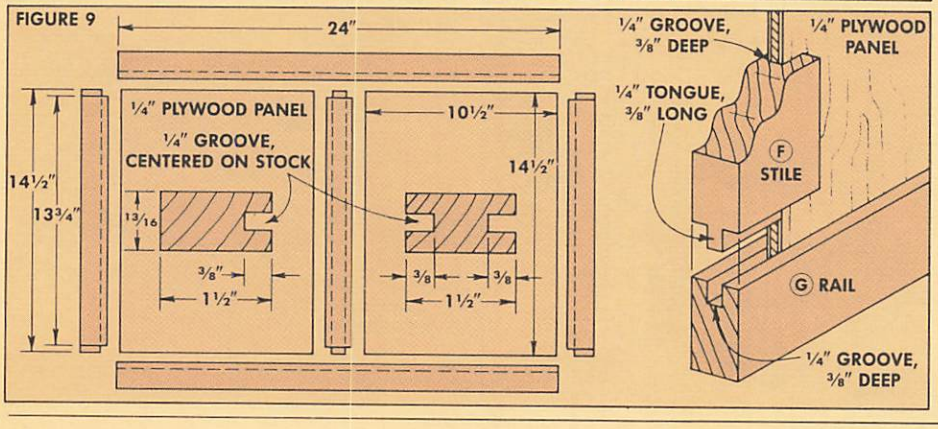

THE TOP

The top of this cabinet presents a rather interesting problem. I wanted to make it fancy (with an intricate molded edge), yet I also wanted to use rather common router bits to create this edge. After trying several combinations of bits, I finally arrived at one that only requires three bits.

THE MOLDED EDGE. Before the routing can be done, I cut the four pieces for the top (C) to width and rough length from 5/4 (1 1/16" thick) walnut.

Then I followed the sequence of molding cuts shown in Figure 5. The first, third and fourth cuts are all made on the router table. But for the second cut (a ⅛"-deep rabbet) I switched to a table saw.

JOINING THE TOP. After the molded edges were cut on these pieces, I mitered them to final length. (The length should be a total of 1¼" longer than the assembled sides and web frames.) To join this frame, I used a ⅛" straight bit (on the router table) to cut stopped grooves for splines. (For details, see *Woodsmith* No. 21.)

Next, I cut ¼"-wide grooves on the inside edges of each piece to hold the plywood top panel (M) in place. And finally, I cut the panel to size. This panel is mounted in the frame the same way described for the bottom panel on the previous page. Once the panel is cut, the frame can be glued and clamped together.

ASSEMBLY. When it comes time to mount the top frame to the cabinet, it's simply screwed to the top web frame (screwing from the inside of the cabinet), see Fig. 8.

THE BASE

The base consists of two mitered frames, see Fig. 6. Once again, these eight pieces are cut to rough length, and then the molding cuts are made on the router table.

Next, the four pieces (E) for the base frame are mitered to length. I tried to cut this frame so the measurement between the shoulders of the molded edges was a total of ½" wider than the assembled case (sides and web frames).

Then the four pieces (D) for the kick board frame are mitered to fit in the rabbets of the base frame, and glue blocks are cut to strengthen the corners.

ASSEMBLY. Finally, these two frames can be glued and clamped together. Then when it comes time to mount the cabinet to this base, simply screw the base frame to the bottom web frame, see Fig. 7.

THE CABINET BACK

The back of most cabinets is just a piece of plywood hastily tacked in place. I didn't think this approach was really appropriate this time. Besides, it's very likely that the back of this cabinet will be in plain view (depending on its final setting in the room). So, I went all out and made a frame and

panel assembly for the back.

Once again I used web frame construction, cutting the two rails (G) to the full width of the opening, and the three stiles (F) to rough length for now. Then grooves are cut for the two ¼" plywood panels.

Next, I cut the three stiles (F) to final length, and then cut ⅜"-long stub tenons to fit in the panel grooves, see Fig. 9. However, these cuts are critical because when this frame is assembled it must fit tight in the rabbeted opening on the back of the case. To get this kind of fit, I made the frame just a smidgen larger than needed, and planed the edges down to proper size, and glued it in place.

THE FOUR-PANEL DOORS

There's no way to get around it, building these four-panel doors is a real challenge. But then, it's really just like anything else in woodworking — if it's done with patience (and a few trial cuts along the way), it's very rewarding work.

THE DOOR FRAMES. The door frames are assembled with a special version of a mortise and tenon joint that has a molded edge. We're showing the step-by-step details of cutting this joint on page 12.

The basic procedure is to cut the outside stiles (I) to the full height of the door opening. Then cut the outside rails (H), middle rails (J), and middle stiles (K) to rough length. The inside edges of all these pieces is routed with a ¼" corner round bit. Then a ¼"-wide groove is cut for the panels.

Next, part of the molding is trimmed off so the mortises can be cut, and measurements are taken so the outside rails (H) can be trimmed to final length.

I found that it helps to work on the four outside pieces first. Then dry-assemble these pieces, and mark the position of the mortises for the middle rail (J), and join it to the frame. Finally cut the two short stiles (K) to fit.

THE PANELS. Once the whole frame is dry-assembled, the panels are cut to size. Then I used a new carbide-tipped router bit from Sears (Catalog No. 9 GT 25465, $21.99) to rout the raised-panel profile. This bit works as smooth as silk, cutting the profile on these small panels so they need very little (if any) sanding.

ASSEMBLY. When the doors are assembled, don't glue in the panels — just let them rest in the grooves. Then trim the outside dimensions of the door frame to fit the opening. And finally, cut the hinge mortise to mount the doors.

FINISHING. Since there are so many little nooks and crannies on this cabinet, I wanted to use a finish that didn't cause any "drip and run" problems. I chose Hope's Tung Oil Varnish. This is an oil finish that's very easy to apply, yet leaves a protective coat of varnish and a nice sheen.

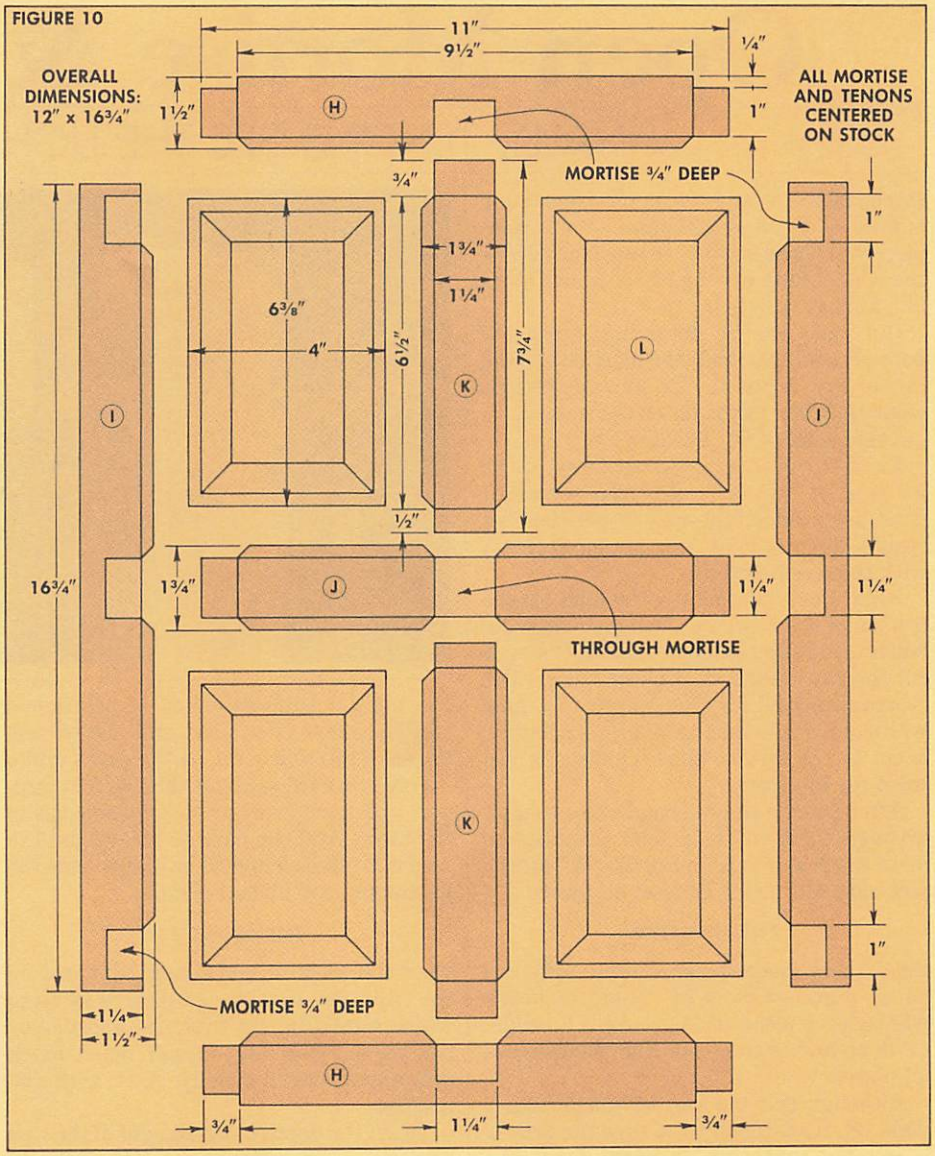

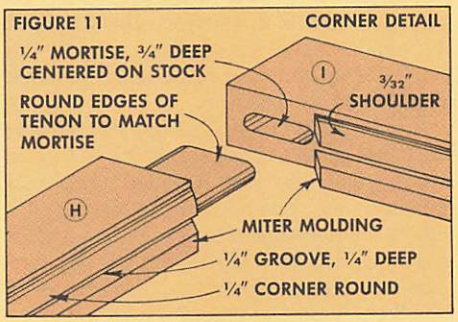

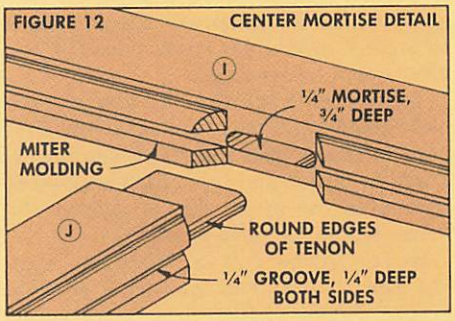

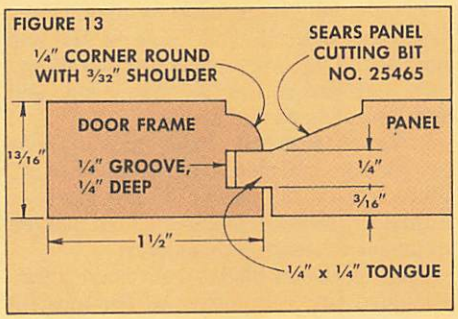

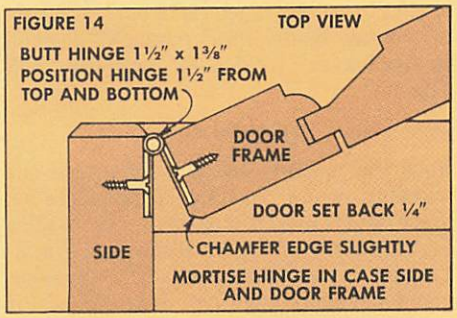

Open Mortise & Tenon

FINALLY, TENONS SEE THE LIGHT OF DAY

On the face of it, an open mortise and tenon is kind of a "show-off" joint — it's completely exposed so you can see exactly how the whole thing fits together. It also looks like a fairly easy joint to cut.

But looks can be deceiving. Since the both parts of this joint (the mortise and the tenon) are exposed, it's all too obvious when they don't fit right on the money. To get that kind of fit, I follow two rules.

First, I cut several extra pieces to use for trial or "set-up" cuts. And second, I don't use a ruler. The way to get the best results for this joint is to gauge each cut with the one before it.

Note: For what follows, the joint for the frames of the Jewelry Case (see page 20) will be used as an example. The first step is cut the rails (horizontal pieces) and stiles (vertical pieces) for the frames to a final width of 1¼". As for the length, each piece is cut to the final *outside* dimensions you want for the frame.

After cutting the rails and stiles to size, arrange them in their final position (to form the frame) and mark an "X" on the face side and inside edge of all pieces.

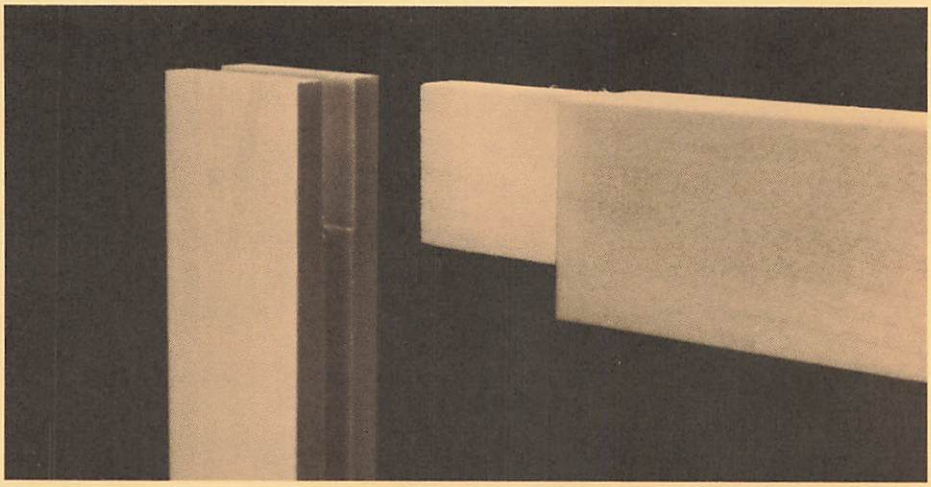

THE GROOVE

Since these pieces form a frame to hold a panel, a groove must be cut on the inside edge of each piece. This groove is ¼" wide, ¼" deep and centered on the thickness of all pieces.

Although this cut can be made with a dado set, it's difficult to be sure the groove is exactly centered. Instead, I cut the grooves with a regular saw blade, using a two-pass procedure that ensures the groove will be centered.

To do this, place the "X" side of each piece against the fence, and make this first pass on all the rails and stiles, see Fig. 1. Then for the second pass, turn each piece around so the other side is against the fence (so the "X" side is out).

Note: Since I was working with 13/16"-thick stock, and wanted a ¼"-wide groove, I did use a ruler for this first series of cuts to set the fence 9/32" from the *inside* of the saw blade. (13/16" minus ¼" for the groove leaves a total of 9/16", or 9/32" on each side.)

TENON JIG

Both the mortise and the tenon are cut standing on end. To support the pieces for these cuts, I used a shop-made jig that fits over the fence of the table saw, see Fig. 2. This jig is just four pieces of ¾" plywood glued and nailed together. It works best if the middle support piece is positioned slightly above the fence, and the bottom edges of the sides rest on the saw's table.

One other thing about this jig. The support arm must be exactly perpendicular to the table. And the nails or screws used to hold it in place should all be higher than the maximum saw blade height.

THE MORTISE

Now the mortise and tenon joint can be cut. And you can argue either way as to which should be cut first, the mortise or the tenon. It really doesn't make much difference, but I usually start with the mortise.

To set the depth of cut (height of the saw blade), use the groove in one of the stiles as a gauge, see Fig. 3. In effect, this height is the maximum width of the tenon, so the mortise can be equal to or less than this height, but not greater.

Next, clamp the rail in the jig and use the panel groove to set the width of cut for the mortise, see Fig. 4. Once again you have a choice. You can set the blade so it's exactly on the edge of the groove, or a little wider (as shown). However, the mortise cannot be cut narrower than the groove or it will show on the end of the rail.)

Finally, cut the mortise by making the first pass with the "X" side of the rail against the jig. Then unclamp the rail and turn it around so the "X" side is out, and make another pass, Fig. 5.

CLEAN UP MORTISE. After making these two passes on all pieces there may be a tiny sliver left in the center of the mortise. Adjust the fence to make one final pass on all pieces to remove this sliver.

Also, since saw blades don't make a flat-bottomed cut, the bottom of the mortise must be cleaned-up with a chisel.

THE TENON

At last, the tenons can be cut, using a two-step procedure. The first step is to make a shoulder cut to set the length of the tenon.

SHOULDER CUTS. Since the length of the tenon must equal the width of the rail, use one of the rails to gauge the distance between the fence and the *outside* of the saw blade. Then, use the mortise to gauge the depth of cut, see Fig. 6. As the shoulder cuts are made, push the stile against the fence, and guide it through the blade with the miter gauge, see Fig. 7.

TRIM FACES. After the shoulder cuts are made, the second step is to trim the faces of the tenon down to final thickness. These cuts are made with the rail standing on end and clamped to the jig.

To set up this cut, raise the saw blade to the top edge of the shoulder cut. Then clamp a trial piece in the jig and adjust the fence until the inside of the saw blade is in line with the bottom of the shoulder cut, see Fig. 8. Make a trial cut to trim off one face of the tenon. Then flip it around and trim off the other face.

If you're lucky, the tenon will fit perfectly in the mortise. If you're like me, you'll have to adjust the setting and make another trial cut until it does fit.

When you've got the right setting, go ahead and make these cuts in all the stiles. Then, since the tenon is a little wider than the groove, there will be two little "fins" that need to be trimmed off with a chisel, see Fig. 9.

That should do it. You should have a perfect open and mortise joint, with grooves exactly centered on each piece.

Step By Step

CUTTING AN OPEN MORTISE AND TENON

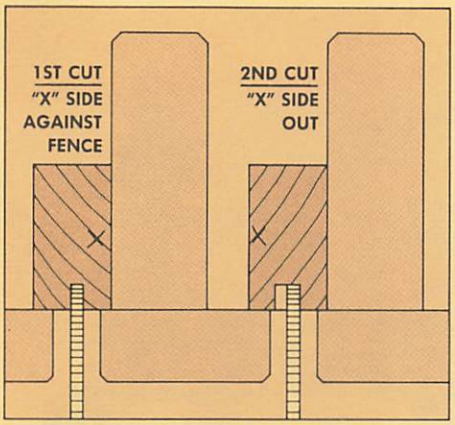

1 *To center the groove on the rails and stiles, makes two passes. The first pass is with the "X" side against the fence. The second pass is with the "X" side out.*

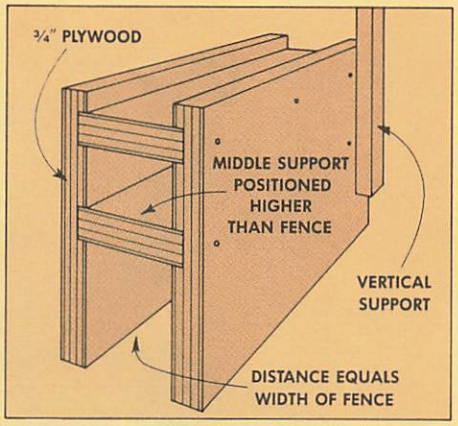

2 *I use this jig to cut the mortise and tenon. Make sure the upright support is perpendicular to the table and the nails are above the maximum blade height.*

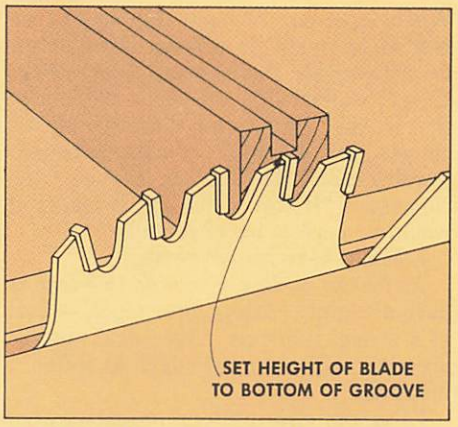

3 *To cut the mortise, set the height of the blade by using the groove in one of the stiles. The height can be right on, or lower than the groove, but not higher.*

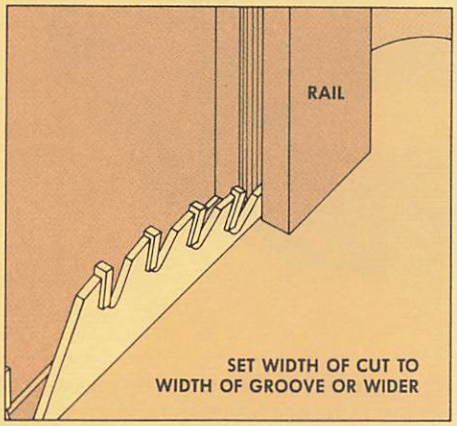

4 *To set the width of cut, clamp the rail in the jig and adjust the fence, using the panel groove as a gauge. The cut can be wider than the groove, but not narrower.*

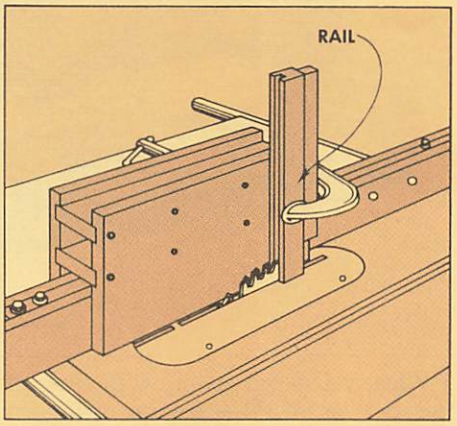

5 *Cut the mortise with two passes. Clamp the "X" side against the jig for the first cut. Then turn rail around (so the "X" side is out) and make a second pass.*

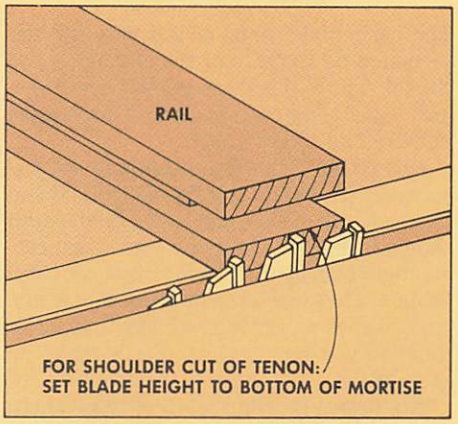

6 *The first step for cutting the tenon is to make a shoulder cut on the rail. Set the blade height for this cut to the bottom of the mortise in one of the rails.*

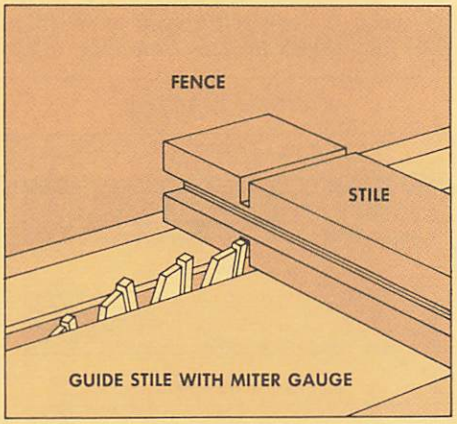

7 *Adjust the fence so the distance to the outside of the blade is equal to the width of the rail. Then make the cuts by guiding the stile with the miter gauge.*

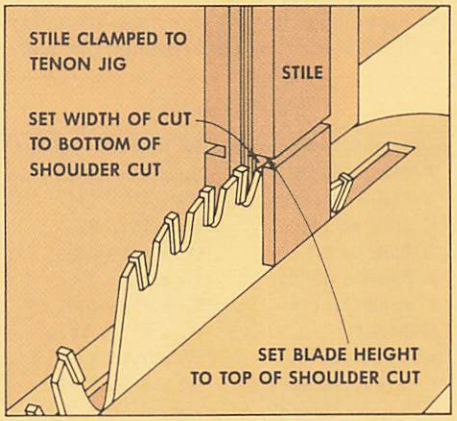

8 *Mount the stile in the jig and use the shoulder cut to adjust both the height and width of this cut. It's best to make this cut on a trial piece first.*

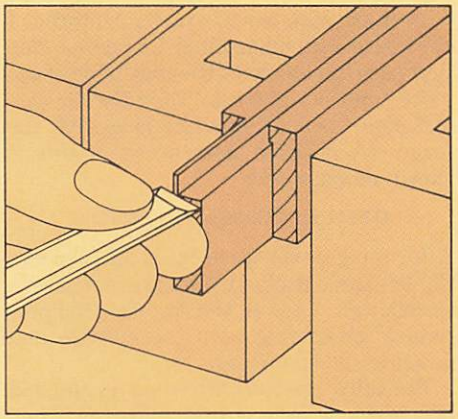

9 *If the mortise is cut slightly wider than the groove, this means the tenon will also be wider, and small "fins" will remain. Trim these off with a chisel.*

Jewelry Case

NICE ENOUGH FOR JEWELRY, SHARP ENOUGH FOR CHISELS

When I set out to build this case, I intended to use it to protect some of my favorite chisels. But as soon as I finished it, Cheryl walked into the shop and hinted that it was "too nice for those cruddy old chisels. But wouldn't it make a terrific jewelry case?" Then Janet (Steve's wife) suggested, "If it were just a little bigger, it would be perfect for silverware."

I should have known better.

As for the design, I wanted this case to have a slightly contemporary look — sort of a straight-forward, functional appearance but with rounded edges to soften it just a bit.

I also wanted it to "fit in" no matter what the surroundings. So, I chose rather traditional-looking woods: walnut for the frames and red gum for the panels.

FRAME AND PANEL

The basic dimensions of this case are determined by the size of the two sides and the lid. These three assemblies are frame and panel construction, joined with open mortise and tenon joints.

THE FRAME. The first step is to cut the six stiles (A and C) and the six rails (B and D) to a width of 1¼", and to the final length shown in Fig. 1. Once the pieces are cut, arrange them in position for the three basic frames. Then mark the face side and inside edge of each piece. It also helps to identify them so you know which pieces make up each frame.

THE GROOVES. Since each of these three frames will hold a panel, a groove must be cut along the inside edge of each piece to accept the panel. I cut this groove ¼" wide, ¼" deep, and centered on the inside edge of each piece, see Fig. 2.

To make sure it was exactly centered, I cut this groove by making two passes. The first pass is made with the "out" side of the piece against the fence. Then for the second pass, the "in" side face is against the fence. (A detailed description of this is shown on page 18.)

OPEN MORTISE AND TENON

After the grooves were cut in all 12 pieces (for the three frames), I cut the mortises in the six rails. (Again, the step-by-step procedure for cutting both the mortise and tenon is shown on page 18.)

Basically, the rails are stood on end and clamped to a jig to cut the mortises. Then the tenons are cut with a two-step procedure, first making two cuts to define the shoulders, and then two cuts to trim the faces of the tenons to final thickness.

What you should end up with after all this is a set of three frames with good tight-fitting open mortise and tenon joints and grooves to accept the panels.

THE PANELS

Once the joints are cut, the frames can be dry-assembled to get the measurements for the panels. First I determined the overall dimensions of each panel by measuring the inside of each frame and adding ½" (for the total depth of the two ¼"-deep grooves).

However, since these panels are made of solid wood, some allowance must be made for seasonal expansion/contraction of the wood. I deducted a total of ⅛" from both dimensions for this clearance. (This

MATERIALS LIST

Overall Dimensions: 15½"w x 5⅝"h - 9¼"d	
A Stile, side (4)	13/16 x 1¼ - 5⅝
B Rail, side (4)	13/16 x 1¼ - 9¼
C Stile, lid (2)	13/16 x 1¼ - 9¼
D Rail, lid (2)	13/16 x 1¼ - 13⅞
E Panel, side (2)	13/16 x 3½ - 7⅛
F Panel, lid (1)	13/16 x 7⅛ - 11¾
G Back (1)	13/16 x 4 9/16 - 14⅞
H Tray Front (1)	13/16 x 2¼ - 14⅞
I Drawer Front (1)	13/16 x 2¼ - 13⅞
J Drawer Sides (2)	½ x 2¼ - 7½
K Drawer Back (1)	½ x 1⅞ - 13⅜
L Tray Sides (2)	¼ x 2 - 7 11/16
M Tray Bottom (1)	¼" plywood
N Drawer Bottom (1)	¼" plywood

CUTTING DIAGRAM

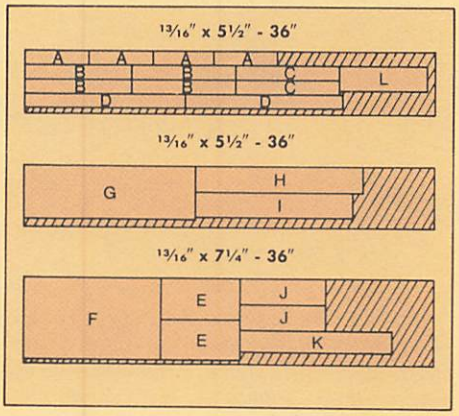

actually allows a 1/16" gap between the edge of the panel and the bottom of the groove on all sides of the panel, see Fig. 3.)

CUTTING THE SHOULDERS. Next rabbets are cut on both sides of all four edges of the panels to form tongues that fit in the grooves in the frames. As shown in Fig. 3, the depth of these rabbets should leave a tongue that's just thick enough to fit snugly in the groove.

The width of the rabbet accounts for 3/16" that fits in the groove and another 1/8" as a shoulder to define the field of the panel. This means the rabbets are a total of 5/16" wide on all three panels.

ROUNDING OVER. Finally, to soften the edges of the panels, I rounded over the shoulders of the rabbets. To do this, remove the pilot from the 3/8" quarter-round bit and guide the panel over the bit using the fence on the router table, see Fig. 4. Note: Both sides of the panel for the lid (F) are visible, so the shoulders on both sides should be rounded.

ASSEMBLY OF THE FRAMES

I also rounded the inside edges of the frames to match the panels. This is a little difficult because it must be done before the joints are glued together. If the joints fit good and tight, the inside edge can be rounded over on the router table with a 3/8" quarter-round bit and pilot, see Fig. 5. However, if the joints are loose, you'll have to clamp the frame together with bar clamps before routing, or use a file and sandpaper to round-over the edges.

Before assembly, I finish-sanded all surfaces of the frames and the panels and got ready to glue them together. However, there's one small problem during assembly.

As the frames are glued together, the tongues of the panels can *not* be glued into the grooves (they must be free to expand/contract). However, if the panels are free to move, they will slide to the bottom of the frames and be off center.

To solve this problem, I spot-glued the panels into the grooves. A small amount of glue is applied to a 1/2" area at the center of the two end-grain tongues, see Fig. 6. This holds the panels in place, but also allows them to expand/contract in width.

OUTSIDE EDGES. After the frames are glued up, the outside corners are rounded to a 1/2" radius. Then all the outside edges are rounded over with a 3/8" quarter-round bit. But don't do this rounding-over just yet. You need square edges to get the measurements for the next set of mortises.

MORTISES FOR THE TRAY. The two side frames have 1/4"-wide mortises for the back (G) and the tray front (H). These mortises are positioned so they don't interfere with the corner joints, see Fig. 6. Once they're cut, you can move on to the inside pieces of the case.

FIGURE 1

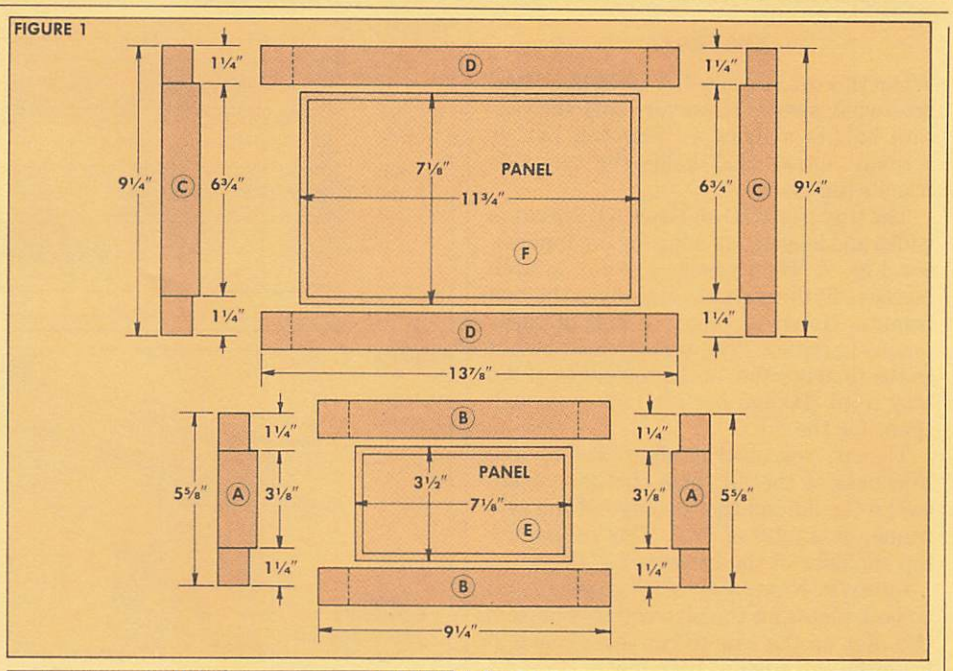

FIGURE 2

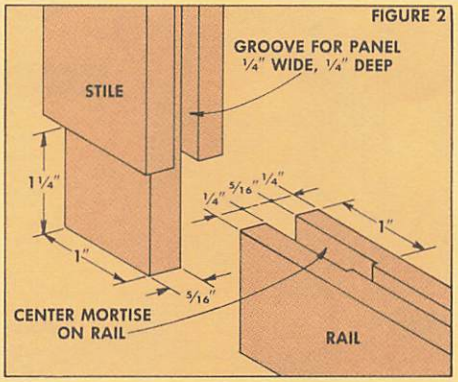

FIGURE 3

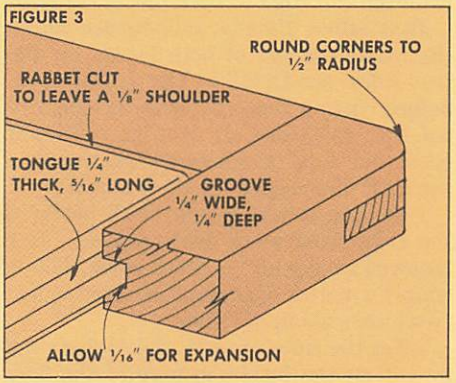

FIGURE 4

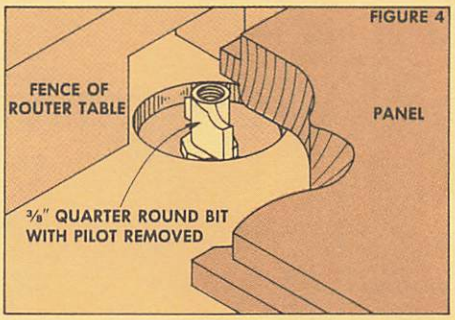

FIGURE 5

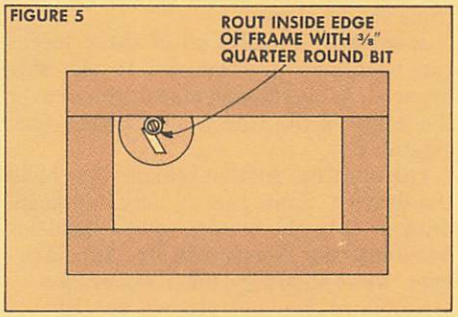

FIGURE 6

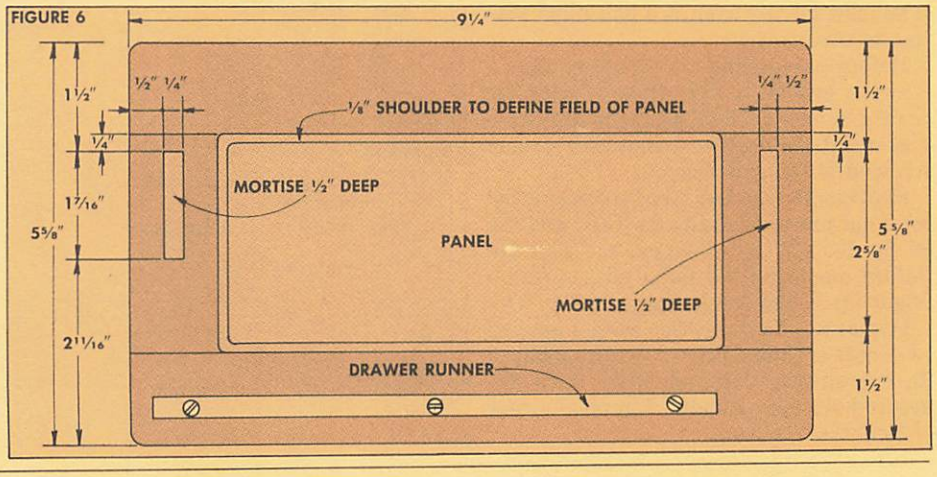

THE TRAY

When this case is closed, it looks like there are two drawers. However, only the bottom half is a drawer. The top half is actually a tray that holds the two side frames together.

The tray front (H) and back (G) are cut to width and length (allowing for the tenons), see Fig. 7. Then tenons are cut in both pieces to fit the mortises already in the side frames. However, the position of these tenons is critical. The tenons must be cut so the final position of the top edges of the tray front (H) and back (G) allow enough space for the lid.

That is, you need to allow 13/16" for the thickness of the lid, plus another 1/8" between the lid and the top edge of the side frame, or a total of 15/16". This means the top shoulder of the tenon is 9/16" deep.

GROOVE. Next, a 1/4" x 1/4" groove is cut on both pieces for the plywood tray bottom (M). Set up the saw to cut this groove 2" from the top edge of both pieces.

TRAY SIDES. Finally, rabbets are cut on the inside corners of both pieces for the tray sides, see Detail in Fig. 7. However, before cutting these rabbets, it's best to cut the tray sides (J) first so you know what their final thickness will be, and thus the final dimensions for the rabbets.

I thought it would look much better if the tray sides were fairly narrow, so I resawed a piece of 13/16"-thick stock. This is simply a matter of ripping on edge to yield two pieces about 1/4" thick.

After the sides are cut, the rabbets can be cut on the inside corners of the tray front and the back.

ASSEMBLY. Finally, all of these pieces can be glued and clamped to the side frames. (As mentioned above, round over the edges of the side frames before final assembly.)

THE DRAWER. All that remains is to build the drawer. Since there's only one small drawer, it might be nice to use hand-cut dovetails (see *Woodsmith* No. 19). However, we're showing a much easier joint — a simple rabbet and groove, see Fig. 9. (The joint for the front is a half-blind version of this joint.)

Before assembling the drawer, rout a 3/8"-wide groove in the drawer sides for drawer runners. Then, after the drawer is assembled, the drawer runners are cut and screwed to the side frames.

FINGER LIP. The last step is to mount the lid. I cut mortises in the back (G) and the lid for 7/8" x 2" butt hinges, see Fig. 10. Before mounting the lid, I also routed a finger lip on the front edge, see Fig. 11.

FINISHING. To finish this case, I applied two coats of thinned-down white shellac (3 lb.-cut shellac thinned 50/50 with denatured alcohol). Finally, I applied a coat of *Renaissance* wax.

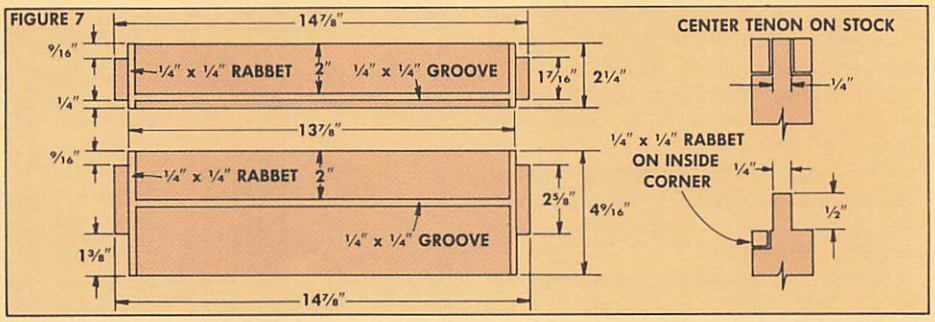

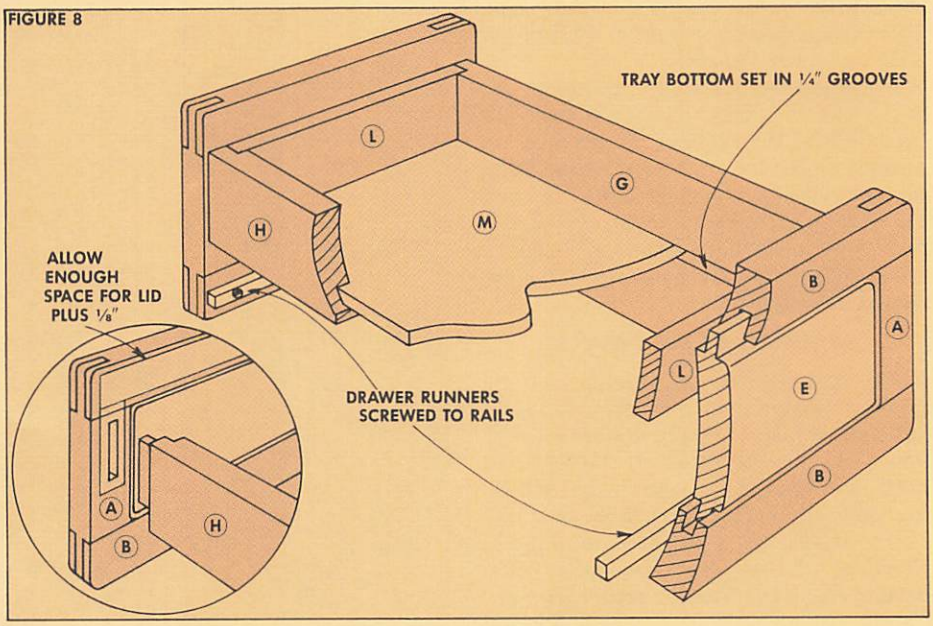

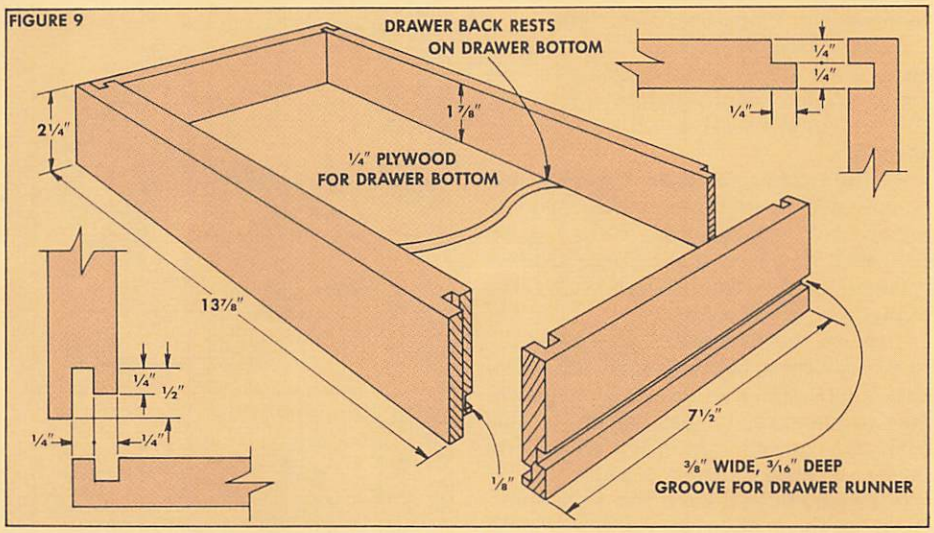

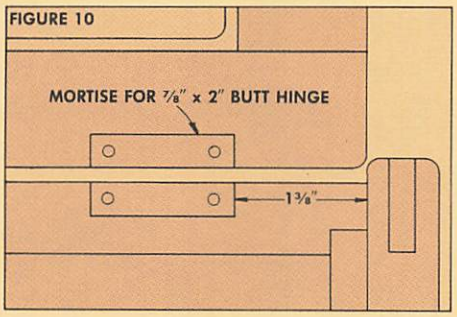

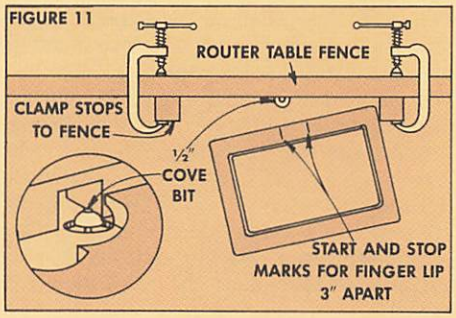

Talking Shop

AN OPEN FORUM FOR QUESTIONS AND COMMENTS

ROUTER DEBRIS

I built the router table in Woodsmith *No. 20, and was happy with the design until I ran into a problem. A chip of wood dropped down into my Sears router, and the fan blades started to break off. Then the fan blades fell down into the armature, causing the entire unit to self destruct!*

I'm guessing that with the amount of wind that's generated by the fan, the wood chip may have fallen into the fan when the unit was turned off, but I'm not sure. A word of caution would have alerted me to this possibility. I know that you can't think of everything, so please pass the word along.

Eric Jensen
Oconomowoc, Wisconsin

We've heard this comment from several readers, and to be honest, we've had the same thing happen to our Sears router.

I think that part of the problem is in the fan blades of the Sears routers. I'm not sure whether it's a design problem, or just a case of using poor quality steel to make the fan blades. The reason I suspect the Sears router itself is because we haven't had any problems with either the Makita or the Porter Cable routers (which have been used more than the Sears model).

In the end, I guess it's a trade-off between having the added versatility of a router table versus the chance of debris entering the motor and causing damage.

And as you mentioned, the most likely time for debris to enter the motor is when it's *not* running. To help prevent this I try to take the time to clean off the top of the router table after each use. The small amount of time it takes is well spent.

DOWELS

We've received a lot of calls and letters wondering why we use mortise and tenon, splines, or other "exotic" joints instead of dowels. To some extent it's a matter of personal preference. But there are some reasons why we tend to shy away from using dowel joints.

EDGE-TO-EDGE GLUING. When boards are being glued edge to edge (as on the table top of the Trestle Table shown in the last issue), it's customary to use dowels to "strengthen" the joint, and to align the boards as they're glued together.

However, straight edge-to-edge gluing and clamping provides more than enough strength for this type of joint. In fact, whatever else is added, whether it be dowels or splines, usually only serves to weaken the joint.

The real purpose of dowels or splines is to align the boards to eliminate a lot of extra handplaning later on.

The problem with using dowels to align the boards is really a problem of trying to align the dowel holes in the first place. Each set of opposing holes (for the dowels) must be *exactly* opposite each other for the length of the boards. Doweling jigs and dowel centers are designed to help with this problem. But they never seem to be able to pull it off, especially when you're working long boards (as on a table top).

Even the slightest misalignment can create major headaches during assembly. And even if the dowels can be persuaded to fit, they'll be creating quite a bit of stress on the glue line, which can cause the boards to warp, or the glue line to fail.

Using splines, on the other hand, eliminates a lot of these problems. All you have to do is cut a slot in the boards, and slip the spline in the slot. Cutting an accurately positioned slot is relatively easy to do: just keep the face of each board against the fence of the table saw with feather boards. (You can also use a router and a slot cutter if the boards are really warped.) This positions the kerf an equal distance from the face along the entire length of the board.

Shop Note: One trick we've found that makes using splines a whole lot easier, is to make the splines out of ⅛" Masonite. It not only has no grain direction (which eliminates orientating the grain across the joint line), it also fits the kerf of our carbide tipped saw blade to a tee.

Another advantage of using splines is that they "feed" themselves into the groove as the boards are pulled tight. So once the splines are started in the groove, it's just a matter of drawing the two boards together.

END GRAIN TO LONG GRAIN. Another common application of dowels is to join two boards end grain to long grain (as on the frame for a door). Usually dowels are used in this case to speed things along, or to avoid using one of the "exotic joints", such as a mortise and tenon.

Unfortunately, dowels are almost the worse choice for this type of joint . . . for several reasons. First, the amount of the long-grain surface of the dowel that contacts long grain of the hole is miniscule. Since this long-grain to long-grain contact is where the gluing strength is, there's very little strength right from the start.

And to make matters worse, dowels have a tendency to deform to an oval shape as they first absorb moisture from the glue, and then release it. The result is that the dowel begins to break free from the sides of the hole as it takes on an oval shape. This not only further reduces the gluing strength of the joint, but it also severely reduces the physical bond between the dowel and the hole. It's usually just a matter of time before the entire joint works itself loose.

By using a mortise and tenon, the long-grain to long-grain gluing surface is (by design) quite large. Since both faces of a tenon are long grain and both surfaces (cheeks) of the mortise are also long grain, the bond between the mortise and tenon provides substantial gluing strength.

The only problem with a mortise and tenon is its reputation: it's an "exotic" joint that only a master craftsman can cut. Although this adds to the mystique, it also exaggerates the difficulty, (and skill required) to cut it. Granted, it may take a few practice shots, but that's part of the fun.

And while I'll admit that cutting a mortise and tenon does take a little longer to complete than drilling a couple of holes for dowels, the results more than compensate the effort. (For more information on mortise and tenon joinery, see pages 12 and 18 of this issue, and also *Woodsmith* issues No. 8, 13, and 18.)

ANOTHER WAY

*In your article "Turning A Goblet" (*Woodsmith *No. 23), why not use a bowl gouge instead of scraping? It causes less vibration, works faster, and requires less sanding.*

David N. Valyou
Woodcraft Supply Corporation

You're right. Using a gouge to turn a goblet is quicker, cleaner, and more satisfying than using a scraper.

In fact, we had a lengthy debate as to which method to show for that article on turning a goblet. We finally decided that those of us who are starting out on the lathe, (and for Don, who's a real klutz when it comes to turning), the "easiest" approach would be using a scraper.

All too often, I think people get turned off to lathe work because of the sometimes frustrating failures that accompany learning how to use a gouge. But we want to do a follow-up article on how to turn goblets the "correct way," using a gouge.

Vanity Mirror

This project started out as an attempt to learn how to cut a molded mortise and tenon joint for the door frames of the Cabinet and Mantel Clock in this issue. Somewhere along the line it dawned on me that this type of frame would be nice as a vanity mirror.

THE FRAME. The frame is very similar to the one for the clock, except the arch is on the outside (instead of the inside) of the top rail.

The two stiles and the bottom rail are cut to a width of 1½", and to rough length (see below). The top rail is cut extra-wide (to 3⅜"), and left "square" to begin with.

Then the molded mortise and tenon joints are cut to join these pieces (see page 12). However, on this frame I used a roman ogee bit instead of a corner round.

Note: When cutting the tenon on the top rail, cut it to the full width of this piece first. Then use a back saw to trim it to fit the mortise.

After the joints are cut, the top rail can be band-sawn to form a gentle curve that ends at the stiles.

SUPPORT ARMS. Next, the curved support posts are also band-sawn to shape. (This is just a double hour-glass shape, see below). Then both edges of these support posts are routed (on the router table) with a corner-round bit, see Detail.

THE BASE. For the base I glued up boards to get the width needed for the top and bottom. These boards are cut to a final size of 8" x 16", and the four corners of each piece are rounded. Finally, the top and bottom edges of each piece are routed the same way as the support posts.

THE SIDES. The sides for the base are cut to size so the grain is running vertically, and mounted to top and bottom with a rabbet/dado joint.

To cut this joint, first cut a double-stopped dado, stopping ½" from the front and back edges of each piece. (I did this on the router table.) Then cut a rabbet on the side pieces, leaving a tongue to fit the dado.

Also, a rabbet is cut on the inside front edges of the sides to accept the lip on the drawer front, see Detail.

ASSEMBLY. Before assembling the base, counterbore pilot holes for #8 x 1½" screws to attach the support posts. Mount the posts first, and then glue the four pieces for the base together.

THE DRAWER. The drawer is very similar to the one on the Jewelry Case, except the joint on the drawer front is cut extra-deep to leave a lip. Also, a kerf is cut on the middle of the drawer front to give the appearance of two small drawers.

MOUNT THE FRAME. The adjusting knobs on the support posts are just porcelain drawer knobs with the screw fastened to the knob with epoxy. Then rosan inserts are mounted to the outside edges of the frame to accept the screw.

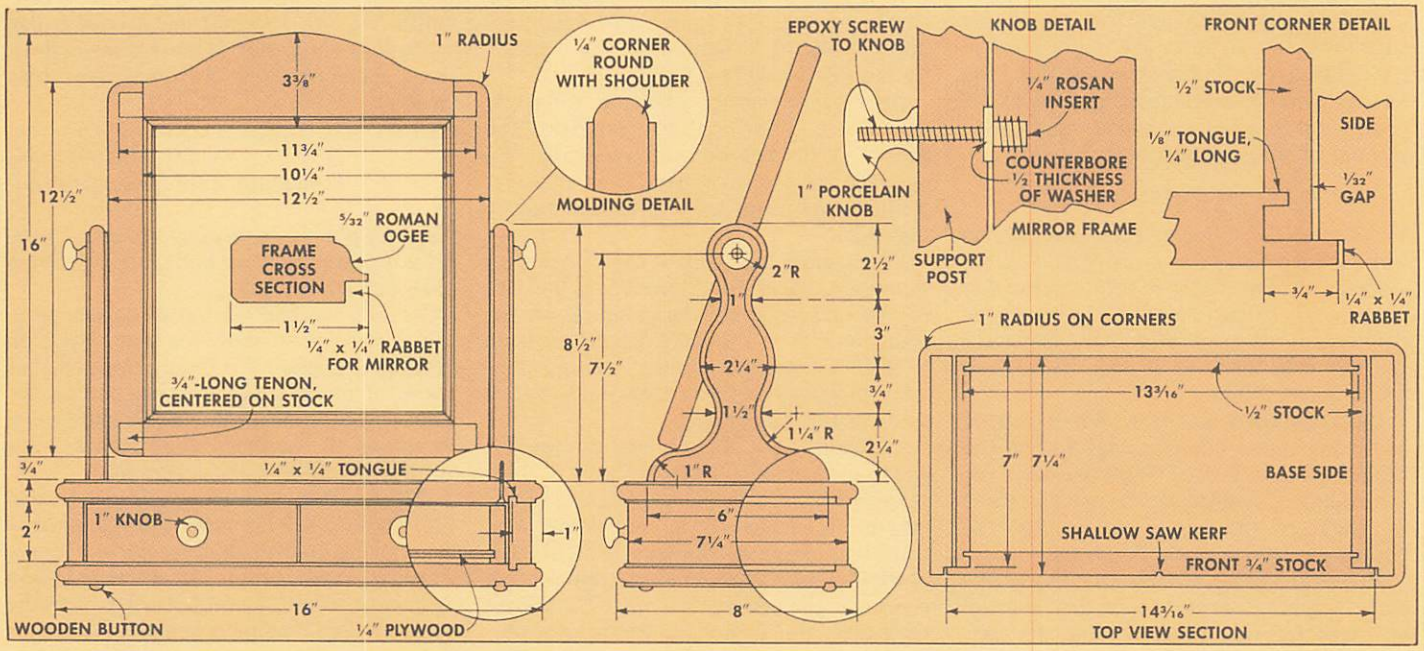

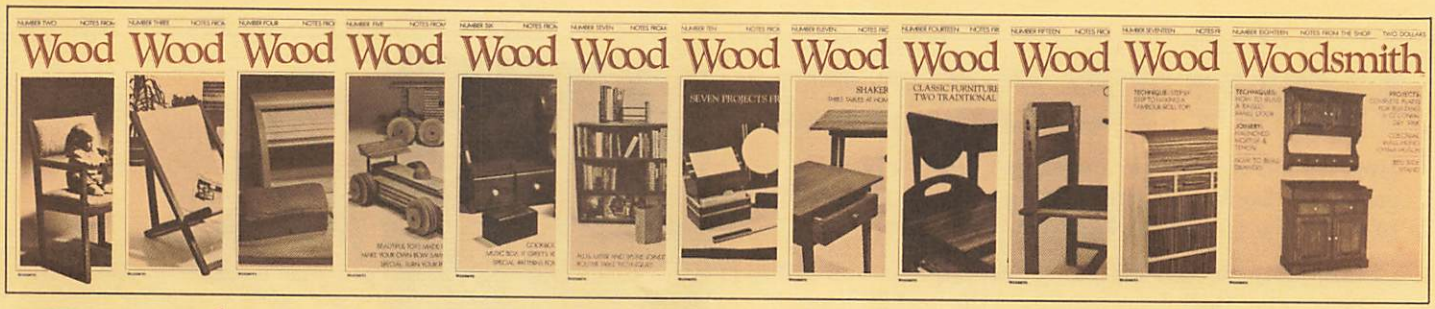

Back Issues

Here's a complete list of all the issues of Woodsmith *published to date. Take a mintue to look it over, and choose the issues that contain the plans and information you want.*

- *Be sure to check out the offers for special packages of* Woodsmith *Back Issues. You can save over $6 by ordering one of these packages. (See back page for details.)*
- *One of the best ways to store all your back issues is with the* Woodsmith *Binder. (See back page for details.)*
- *Whether you order one issue or a complete package, there's no charge for postage or handling.*

NUMBER ONE: Colonial Trestle Table • Double Duty Table: Coffee Table Or End Table • One-Evening Projects: Tie Rack, Cooling Rack, Cutting Board • Shop Projects: Finger Clamps, Two Drill Press Guides, Taper Jig.

NUMBER TWO: Contemporary Dining Room Chairs • Woven Veneer Hanging Lamp • Shaker Peg Coat Rack • Technique: Raised-Panel Door • Joinery: Mitered Half-Lap With Groove For Raised Panel • Tissue Box Cover With Box Joint • Joinery: Cutting A Box Joint

NUMBER THREE: Redwood Garden Bench With Serving Tray And Plant Box • Canvas And Redwood Deck Chair • Twelve-Sided Redwood Plant Tub • Nine Variations On Planters • Hanging Planter From Redwood Scraps • Tips On Wood For Outdoor Use.

NUMBER FOUR: Roll-Top Bread Box • Lazy Sam Revolving Storage For Drill Bits • Portable Wooden Router Case • Shop Stool With Angled Legs • Technique: Three Jigs For Drilling Holes At An Angle • Scrap Wood Tool Holder • Shop Storage Box Of Drawers.

NUMBER FIVE: Exclusive Design For A Router Table To Convert Router Into Shaper • Wooden Toys: Train And Race Car Made From Laminated Plywood • Technique: Two Ways To Draw An Elipse • Oval Picture Frame • Wedge Clamps Made From 2x4s • Adustable Taper Jig.

NUMBER SIX: Solid Walnut Music Box • Colonial Cookbook/Recipe Shelf • Candle Sconce • Six-Drawer Pine Spice Box • Technique: Resawing On A Table Saw Or Band Saw • Joinery: Locked Rabbet • Full Size Patterns For Six Wooden Christmas Ornaments

NUMBER SEVEN: Book/Magazine Case With Sliding Shelf • All-Wood File Cabinet • Book Rack With Sliding Stop • All-Wood Loose Leaf Binder • Octagonal Waste Basket • Router Table Techniques: Methods For Using A Router Table • Joinery: Miter And Spline.

NUMBER EIGHT: The Basics Of Mortise And Tennon Joint • Slot Mortise: An Easy Approach To Cutting A Mortise • Cutting A Tenon With The Emphasis On The Shoulders • Haunched Mortise And Tenon With Groove To Accept A Panel • Colonial Wall Cabinet • Contemporary Frame And Panel Cabinet.

NUMBER NINE: Display Case With Glass Door • Sweater Chest With Solid Wood Hinges • Lap Desk With 'Wooden Spline' Hinges • Jewelry Box With Gusset Hinges • Joinery: Dovetail Tongue And Groove • Joinery: Parallel Spline • Joinery: Locked Miter.

NUMBER TEN: Vanity Mirror On Swivel Base • Laminated Frame Desk Clock • Routed Coin Tray • Solid Wood Belt Buckle • Kitchen Knife Holder • Wooden Letter Opener • Recipe Box With Card Display • Joinery: Rabbet And Groove

NUMBER ELEVEN: Shaker Design • Spider-Leg Candle Stand • Single-Drawer Side Table • Drop-Leaf Dining Table • Technique: Cutting A Drop-Leaf Edge • Math Of Tapering A Leg • Jig For Sanding Circles.

NUMBER TWELVE: Shaker-Style Slant Top Writing Desk • Octagonal Wall Clock • Round Mirror Frame • Joinery: Twin Tenons By Hand • Exclusive Design: Horizontal Boring Jig • Mathematics Of Miters • Adjustable Miter Jig • Technique: Cutting A Cove On A Table Saw.

NUMBER THIRTEEN: Contemporary Hutch/Cabinet With Six-Pane Doors, And Two-Drawer Cabinet • Technique: How To Build Glass Doors • Cutting Muntins And Stops • Joinery: Staggered-Shoulder Mortise And Tenon For Glass Doors • Routed Jewelry Box • Roll-Around Shop Cart.

NUMBER FOURTEEN: Pembroke Table With Oval Top And Drop Leaves • Butler's Tray Table With Fold-up Leaves • Scrap Wood Turned Canister • Technique: How To Sharpen And Use A Cabinet Scraper Blade • Finishing Technique: Hand-Rubbed Satin Sheen.

NUMBER FIFTEEN: Contemporary Oak Chairs • Solid Oak Kitchen Table • Joinery: Step-By-Step To A Wedged Mortise And Tenon • End-Grain Box Top • Shop Storage Box Of Drawers • Technique: How To Build A Table Top.

NUMBER SIXTEEN: Folding T.V. Tray Tables • Contemporary Blanket Chest • Octagonal Redwood Planter With Tapered Sides • Technique: Taper/Bevel Cut • Technique: Rip/Bevel Cut • Joinery: Mitered Mortise And Tenon • Mortise/Tenon Cutting Jig For A Radial Arm Saw.

NUMBER SEVENTEEN: How To Make A Tambour (Roll Top) • Stereo Cabinet With Tambour Sliding Doors • Tambour Wall Cabinet • Contemporary Six-Drawer Chest • Joinery: Box Joint • Slide-Top Box With Finger Joints • How To Build Box Joint Drawers.

NUMBER EIGHTEEN: Colonial Dry Sink With Matching Wall-Hung Hutch • Bed-Side Stand • Note Board • Technique: How to Build Raised-Panel Doors • Joinery: Haunched Mortise & Tenon • How To Build Lipped Drawers • Wooden Drawer Guide System.

NUMBER NINETEEN: Dovetails: Step By Step To Laying Out And Cutting Through Dovetails By Hand • Three-Drawer Coffee Table • How To Build Dovetail Drawers • Shaker Step Stand • Dovetailed Serving Tray • Tissue Box • Make Your Own Marking Gauge.

NUMBER TWENTY: Step-By-Step To Sharpening Chisels • An Interview with the Norton Company • Sharpening Aids • Gate-Leg Buffet Table • Exclusive Plans For A Shop-Made Router Table • Wall Shelf • Joinery: Dovetail Tongue & Groove • Bread Board

NUMBER TWENTY-ONE: Complete Plans For a Schoolhouse Clock • Curio Cabinet With Glass Doors and Panel • Round-Arch Wall Mirror To Match Curio Cabinet • Bowl Turning: The Tools And Techniques • Step-By-Step To Turning A Wooden Fruit Bowl • Joinery: The Basics Of Miter And Spline • Spinning Server.

NUMBER TWENTY-TWO: Modular Storage System With Completely Interchangeable Drawers, Doors, and Shelves • European-style Contemporary Cabinet and Hutch • Joinery: Lap Dovetails By Hand • Joinery: Cutting Lap Dovetails With a Router.

NUMBER TWENTY-THREE: A Contemporary Version Of A Classic Trestle Table With A Matching Trestle Bench • Complete Step-By-Step For Turning Two Goblets • Microwave/Serving Cart • Bench Planes: How To Adjust Them • How To Sharpen Plane Irons • Tips On Planing A Table Top.

NO LONGER AVAILABLE

HOW TO ORDER

Here's a list of the special packages of Back Issues you can order. Look them over and then use the form below to order the special package you want.

☐ **Complete Set Of Back Issues: $39.90.** The complete set of Back Issues includes the past 22 issues of *Woodsmith*. (Note: Issue # 1 is no longer available.) By getting the complete set you'll have an entire library of woodworking plans, techniques, and information right at your finger-tips. The regular price of these 22 issues is $46.50. But by ordering the complete set you save over $6.

☐ **Back Issue Package #2-12: $18.95.** This set of *Woodsmith* Back Issues includes Issues # 2 through #12. (Issue #1 is no longer available.) The regular price of these 11 issues is $22. But by ordering this special package you save over $3.

☐ **Back Issue Package #13-23: $20.95.** We call this package the "Best of *Woodsmith*." It includes the eleven most recent issues of *Woodsmith*. (#13 through #23). The regular price for these eleven issues is $24 50. But by ordering this special package you save over $3.

☐ **Single Issues.** If you prefer, you can order only those Back Issues of *Woodsmith* that have the plans and information you need.
Issues #2 through #18 are $2.00 each.
Issues #19 through #23 are $2.50 each.

☐ ***Woodsmith* Binder: $7.95.** The perfect way to store all your Back Issues (plus your future issues) is with the *Woodsmith* three-ring Binder. This is an extra-large binder that usually costs over $10. But with this special offer the price is only $7.95.

SPECIAL OFFER: 3-RING BINDER

Here's the perfect binder for storing all your back issues of *Woodsmith*. This large-capacity three-ring binder will hold all the Back Issues of *Woodsmith*, with room to spare for adding future issues.

The *Woodsmith* Binder features:

- Durable plastic covers with heat-welded edges
- Soft-padded covers in a rich brown color
- Lever-action snap rings
- Gold embossed *Woodsmith* logo
- Large-capacity 1½" ring (instead of the usual 1")
- No charge for postage or handling.
- And most important, it's a quality binder at a reasonable cost.

The retail price of this binder is over $10. But with this special offer you save over 20%. The *Woodsmith* Binder is only $7.95.

Woodsmith® BACK ISSUE OFFER

To order your Woodsmith *back issues check the package, or circle the individual back issues you want.*

☐ **Complete Set** of 22 *Woodsmith* Back Issues: $39.90.

☐ **Package #2-12** (Issues #2 to #12): $18.95

☐ **Package #13-23** (Issues #13 to #23): $20.95

☐ **Single Issues:** #1 through #18: $2.00 each
#19 through #23: $2.50 each

2	3	4	5	6	7	8	9
10	11	12	13	14	15	16	17
18	19	20	21	22	23		

☐ **Three-Ring Binder:** $7.95

Payment: I've enclosed payment of $ _____

for a total of _____ Back Issues.

Send To: *Woodsmith* Back Issues
1912 Grand Avenue
Des Moines, Iowa 50304

Important: Please fill in your name and address:

Name _____

_____
Address

_____
City State ZIP

024